OPERATOR'S MANUAL
SERVICE BOOK

RC-750



Applies to model RC-750 with type/serial number: 410100-01

TIMAN

RC-750

Congratulations on your sale of another RC-750

You are purchasing a quality product to your customer that comes with a guarantee from the factory, and the guarantee period starts on the date of delivery. Therefore we kindly ask you to complete the information and send or fax it to the factory. This will allow us always to be able to assist you in the best possible way.

Dealer:_____ Date of delivery: _____

Customer: _____

Customer's address: _____

Postal code:_____ Phone number.:_____

Identification number of the machine: _____

IMPORTANT – IMPORTANT – IMPORTANT

TO THE DEALER

GUARANTEE REGISTRATION

TIMAN A/S
Fabriksvej 13 · DK-6980 Tim · Phone +45 97 330 360 · Fax +45 97 330 350
E-mail: timan@timan.dk · www.timan.dk · CVR: 27609627

OPERATOR'S MANUAL

SERVICE BOOK

DIAGRAM

SPAREPARTS CATELOGUE

HONDA OWNERS MANUAL

TIMAN

OPERATOR'S MANUAL
SERVICE BOOK

RC-750



Applies to model RC-750 with type/serial number: 410100-01

TIMAN

1 INTRODUCTION 4
1.1 IMPORTANT 4
1.2 INCORRECT USE 4
1.3 IDENTIFICATION OF THE MACHINE 5
1.4 ORDERING SPARE PARTS: 5
2 SAFETY REGULATIONS 6
3 SAFETY PRECAUTIONS DURING MAINTENANCE AND ADJUSTMENTS 8
4 SPECIFICATIONS 10
4.1 SPECIFICATIONS 10
4.2 NOISE TEST 10
4.3 EU DECLARATION OF CONFORMITY 11
5 EXPLANATIONS FOR THE WARNING SIGNS ON THE MACHINE 12
6 CONSTRUCTION OF THE MACHINE 13
6.1 MOWER 14
6.2 TRACKS 15
6.3 MOTOR AND HYDRAULICS 15
7 RECOMMENDED OPERATING INSTRUCTIONS 16
8 STEERING 18
8.1 CONTROL BOXES 18
8.2 REMOTE CONTROL NBB 19
9 RC-750 SAFETY SYSTEM 21
10 PREPARING THE MACHINE 22
10.1 DELIVERY OF THE MACHINE TO THE DEALER 22
10.2 CONTROL OF MOTOR OIL LEVEL 22
10.3 CONTROL OF HYDRAULIC OIL LEVEL 23
10.4 CONTROL OF AIR FILTER 24
10.5 PREPARATION OF THE BATTERY 25
10.6 FUEL TANK 26
11 OPERATION OF THE MACHINE 27
11.1 USING A NEW MACHINE 27
11.2 CONTROLS TO BE CARRIED OUT BEFORE START 27
11.3 START OF THE MACHINE 28
11.4 STOP OF THE MACHINE 29
11.5 START/STOP OF MOWER 30
11.6 MOWING HEIGHT 31
11.7 OPERATING THE MACHINE 32
11.8 PROGRAMMING OF POSITION 0 33
11.9 CHANGE OF FREQUENCY 33
11.10 TRANSPORT OF THE MACHINE 34
11.11 TOWING OF THE MACHINE 34
11.12 LIFTING OF THE MACHINE 35

11.13 DESCRIPTION OF TILT SENSOR 35
12 SERVICE AND MAINTENANCE 36
12.1 LUBRICATION OF THE MACHINE 36
12.2 CHANGE OF TRANSMISSION OIL AND FILTER 38
12.3 CHANGE OF MOTOR OIL 39
12.4 TIGHTENING AND MAINTENANCE OF DRIVE BELTS 39
12.5 CHANGE OF FLAILS 42
12.6 TIGHTENING OF THE TRACKS 43
12.7 MOUNTING OF SPIKES 44
12.8 CLEANING OF THE MACHINE 45
12.9 TORQUE MOMENTS 45
13 FAULT LOCALISATION 46
14 MAINTENANCE AFTER THE SEASON 47
15 GUARANTEE STIPULATIONS FOR THE RC-750 47

Congratulations on your new **TIMAN RC-750**

This manual is prepared in order to help you with the correct use, adjustments and maintenance of your new machine.

Please read this manual carefully before any attempt is made to run or work with this machine – in particular the sections regarding safety.

The indications right and left in the manual and in spare parts lists are the machine seen from behind in the driving direction.

1 INTRODUCTION

1.1 Important

The RC-750 is a remotely controlled flail mower. The life of the equipment depends on how maintenance and services are carried out.

The operator's manual supplied with the machine must always be available for the operator. Before any attempt is made to run or work with the machine, the manual must be studied carefully, in particular those sections dealing with safety stipulations (sections 2 and 3). Only persons above 18 years of age who are acquainted with the safety stipulations for the machine are allowed to operate the machine.

In case your manual gets damaged or is lost, please request a new manual at your local Timan dealer.

The manufacturer's responsibility for possible losses or damages will be cancelled, if any constructional changes are made to the machine.

The machine is designed for cutting grass, low vegetation and one year old bushes on level grounds as well as on inclinations sloping maximum 58 degrees. For inclinations sloping more than 25 degrees it is a precondition that the surface is dry.

1.2 Incorrect use

The machine must not be used on surfaces, where glass, stones, metal pieces, or other foreign bodies might appear. Such objects can be thrown out or cause damages to the mower. Do not use the machine unless you are acquainted with the terrain and especially the whereabouts of unwanted stubs, water holes, swamps or soil with a poor bearing.

The machine must not be used on inclinations over 25 degrees when it is raining or misty or if the surface is wet.
Do not use the machine for vegetations that are more than 1 year old. If you do, the plants can damage the machine. It is important to keep a safety distance of minimum 15 m to all persons and animals.

The machine must not be used for pulling purposes or for transportation of people. It is not allowed to use the machine on public roads. It is not allowed to modify the construction of the

machine. The manufacturer is not responsible for any loss or damages whatsoever resulting from such changes.

1.3 Identification of the machine

Manufacturer: Timan A/S
Fabriksvej 13
DK-6980 Tim, Denmark

Model: RC-750

Identification number: **type – serial – machine number**

Example: 410100 – 01 – 1001

1.4 Ordering spare parts:

Your dealer is of course interested in helping you with the maintenance of your machine and will be glad to assist you in getting the greatest benefit out of it. After you have read this manual carefully through, you will find that you can carry some of the servicing out yourself. But when spare parts or more comprehensive service work are needed, you should turn to your Timan dealer, where you have bought the machine, or to a local, authorized Timan service workshop.

In order to expedite the delivery of spare parts and to avoid mistakes please submit the following information:

- The identification number of the machine: _____
- The number and units required of the spare part
- Dispatch mode

The machine sign is placed behind the black control box in the left side of the machine.
Look for the identification number and write it on the line above and also on the front page of the catalogue.

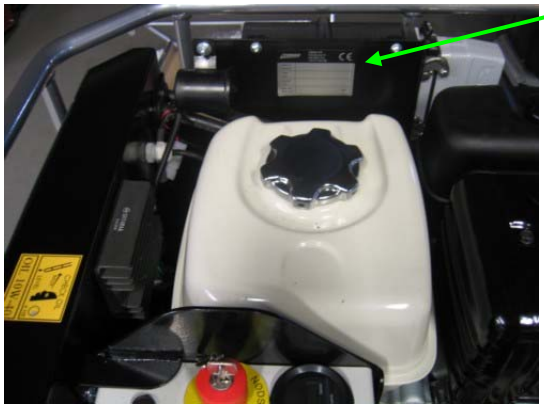

Location of the machine sign at the RC-750

2 SAFETY REGULATIONS



WHENEVER YOU SEE THIS SIGN IN THIS BOOK YOUR SAFETY IS CONCERNED!

It is the responsibility of the user that the guards are mounted and the available safety equipment and all safety regulations are employed and observed.

Careful operation is the best guarantee against accidents. Please read this chapter thoroughly through, before taking the machine in use. All operators, irrespective of their experience, must read this manual before they use the machine. It is the responsibility of the owner to inform all operators about secure handling.

Only persons above 18 years of age, who have acquainted themselves with the machine and the manual, are allowed to operate the machine. The remote control is regarded as a part of the machine.

The safety regulations are for your safety - therefore **PLEASE REMEMBER**:



1. Inform everyone, who is to work with or near the machine, about the safety regulations.



2. Do not start the machine until everyone is aware of your intention.



3. Never start the machine until all safety guards have been mounted and closed. Replace or repair missing or damaged guards immediately.



4. Make sure that everyone near the machine keeps a distance of minimum 15 m to the machine, when the machine is started and is working.



5. Stop the motor with the remote control and wait until the machine is completely stationary. Engage the emergency stop contact of the machine and remove the key from the emergency stop contact before cleaning, lubrication, adjustment or repair of the machine.



6. No persons, including operators, are allowed to sit on the machine as passengers.



7. Never leave the machine without stopping the motor and engaging the emergency stop of the machine and removing the key, so the machine cannot be started by accident.



8. Always wear a face shield when work is carried out with the machine.



9. Keep the machine free of objects, which may block its functions.



10. Never wear loose clothing while working with the machine and keep a safe distance from rotating parts.



11. Be ware of warm surfaces and exhaust gases; they could pose risks of getting burnt.

12. Keep your hands away from the working parts of the machine.

13. Keep the motor area free of dust and dirt in order to reduce the risk of fire.

14. Always have the machine within your range of vision and be ready to react if there are holes or irregularities in the terrain.

15. Always handle the remote control with due care. The operator must therefore always stand on even ground and have a good view of the machine.

16. Never let open fire come near the petrol and oil tanks during filling.

17. Never let the motor run in closed rooms. The exhaust gases are dangerous and potentially fatal.

18. Never let the machine run in places where it could skid or tip over. Let it run slowly on slopes. Special care must be taken when it runs on wet surfaces.

19. Never use the machine when you are under the influence of alcohol, medicine or similar drugs, or if you are tired.

20. Always remove the area to be mowed from all foreign objects, such as stones, cones, sticks, glass or wires and other objects, which might get caught and thrown out by the flails or can damage the machine.

21. When operating the machine for the first time this should take place on a flat and even surface. The operator must wait to run the machine on slopes or hilly terrain until he is well acquainted with its functions.

22. Do not run close to waterholes, holes, dams or other places in the terrain, which might give in to the machine's weight. There is an increased risk of tipping over, when the ground is loose or moist.

23. Do not use the machine if there is less than 30% fuel in the fuel tank because of the risk of running dry.

24. Do not use the mower when the visibility is diminished (twilight, fog, heavy rain etc.) Never run the machine behind obstacles like for instance house corners, behind trees or bushes, in vegetation hiding the machine. Keep a good look out where the machine runs.

25. Please note that if you run the machine below overhead lines, the radio signal might get lost. The machine will then stop the motor and all its movements.

26. In windy weather the operator should choose a place to stand away from the stream of exhaust gases, dust and cut-off grass coming from the machine.

27. Fuel filling must always take place with the motor stopped. Do not start the motor, if fuel has been spilt. If it is necessary to tank up during work, wait until the motor has cooled down.

28. Always stop the motor before you leave the machine. This is done through engaging the red emergency stop button at the control panel and removing the key. Never leave the sender on the machine, keep it in a safe place and away from other persons.

3 SAFETY PRECAUTIONS DURING MAINTENANCE AND ADJUSTMENTS

1. Before attempting to carry out any kind of adjustment or maintenance on the machine, the motor must be stopped. Engage the emergency stop button of the machine and remove the key from the emergency stop button (to prevent unauthorized persons from starting the motor.)

2. Make sure that all parts of the machine are stationary before carrying out maintenance or adjustments.

3. **Hydraulic system:**

   a. Only persons who are familiar with hydraulic systems (including the risk on contact with hydraulic fluid, especially under pressure) are allowed to carry out repair and maintenance of the hydraulic system of the machine.

   b. The excess-pressure valves are set by the factory must **not** be adjusted without previous agreement with the dealer, importer or service department at Timan A/S.

   c. Claims for damages after incorrect use or maintenance/repair will not be accepted.

   d. Check the proper condition of the hoses before every use (if frayed, worn, twisted etc.) and replace any damaged part immediately.

   NB: Never attempt to find leaks in the hydraulic system with your hands – hydraulic fluid under high pressure coming from minor leaks can be invisible, and such a fine oil jet under high pressure can damage your hand; instead a piece of wood, carton or the like should be used.

4. **Batteries:**

   The batteries contain a sulphuric acid electrolyte, which can cause serious burns and produce explosive gases. Avoid getting this liquid on your skin, into your eyes or on your clothing. Do not swallow the liquid. The necessary measures mentioned below must be observed:

   a. Never be near open fire when checking the level of the electrolyte. Keep sparks, flames and lit cigarettes away.

b. Be careful not to produce sparks with the cable terminal, when charging the battery or starting the engine with an auxiliary battery.

c. Protect your eyes, when working near the batteries.

d. Provide for good ventilation during charging or work in closed rooms.

Should you by accident get electrolyte on your skin, into your eyes or you swallow it, you must start the following treatment:

Skin: ***Wash with cold water.***

Eyes: ***Wash with cold water and consult medical aid immediately.***

Internal: ***Consult medical aid immediately.***

5. During welding at the RC-750:

Always remove the positive from the battery of the machine and engage the emergency stop button of the machine and remove the key from the emergency stop button.



6. Always replace any safety guard, which has been removed to make an adjustment or to carry out routine maintenance. Always ensure that all nuts, bolts, screws, etc. are correctly tightened after making adjustments. Please see the section 'Torque Moment'. The first control is to be carried out after 8 hours' of operation. Account for all tools before replacing guards or before starting the machine.



7. Make sure that all persons are clear of machinery and visible to the operator before starting the machine.

8. Use only original Timan A/S' spare parts.

9. Stop working and clean the machinery from dust regularly in order to prevent overheating of the machine.

4 SPECIFICATIONS

4.1 Specifications

Model	**RC-750**
Motor	Honda IGX440
Number of cylinders	1
Cylinder volume	1498
HP /kW	15/11
Maximum rpm.	3600
Cooling system	Air cooling
Fuel tank	5.1 l
Transmission	Double piston pumps Sauer Danfoss
Wheel motors	Orbit motor Sauer Danfoss
Speed	0-6 km/h
Electric system	12 volt
Generator	20 amp
Flails	16 stk. hammering flails / 32 Y flails
Coupling	12 V electromagnetic
Dimensions and weight:	
Length	1860 mm
Width	865 mm
Height	585 mm
Turning radius	0
Overall weight	340 kg
Noise level	107 dB(A)

4.2 Noise test

To RC-750 is made a noise measurement. This measurement is diminished outdoors on a level with the lawn mower activated and the engine operating at maximum revolutions.

Measurements are made according to DS / EN 10094
Noise level is measured to L_{wA} = 107 dB with a measurement accuracy of + / - 2 dB
Noise level 15 m from the machines are intended to L_{A15m} = 75.2 dB

4.3 EU Declaration of Conformity

EU Declaration of Conformity

2006/42/EU App. II A

Manufacturer:

Name	Timan A/S
Address	Fabriksvej 13
Postal code and town	DK-6980 Tim

Technical dossier compiled by (authorized by the manufacturer):

Name	Henning Pedersen
Address	Fabriksvej 13
Postal code and town	DK-6980 Tim

hereby declare that the machine model:

- RC-750 with the type number 410100-01

was manufactured in conformity with the provisions in the following EU COUNCIL DIRECTIVES:

- 2006/42/EC Machine Directive
- 2006/95/EC Low-voltage Directive
- 2004/108/EC EMC Directive
- 1999/5/EC R & TTE Directive

under the employment of the following harmonizing standards:

- DS/EN 745 – 1999 Safety Flail Mower

and the below mentioned national standards and technical specifications:

Signer:	Position:	Place:	Date:
Henning Pedersen	Technical Manager	Tim	15.02.2010

Signature



5 EXPLANATIONS FOR THE WARNING SIGNS ON THE MACHINE

Every measure is taken during the development of the machine in order to secure the operator against all safety risks. In special operating situations the machine can nevertheless pose a risk. The machine is therefore provided with warning signs in order to reduce the risks and it is important to pay attention to the potential risks indicated by the warning signs. Please read the explanations for the symbols carefully and learn what they are indicating.

Keep the warning signs clean and replace them immediately, if the get damaged or lost.



a. b. c. d. e. f.



g. h. i. j

a. WARNING: Read the manual carefully before utilizing the machine.

b. WARNING: Before service is carried out on the machine you must stop the machine, engage the emergency stop button, and remove the key from the contact. Follow the instructions given in the manual.

c. WARNING: It is not allowed to have passengers or to sit on the machine, when it is running

d. WARNING: A 15 m safety distance must be kept to the operator and to other persons and animals. There is a danger of getting hit by thrown-out fragments.

e. WARNING: Rotating vertical flail bar. Keep hands and feet at a safe distance – then can be damaged.

f. WARNING: The operator must always be on the side of the machine, never in front of it. If he does, fragments thrown out by the mower can hit him.
When driving on slopes, the operator must not be downhill where the machine could hit him, if it turns over.

g. WARNING: Never drive on slopes that are steeper then 58 deg. If you do, the motor will not be sufficiently lubricated and get damaged. The machine is also at great risk of turning over.

h. WARNING: Always use a face shield to protect your face against thrown-out particles.

i. WARNING: Danger of trapping hands or feet. Do not put your hands or feet into the tracks.

j. WARNING: Mower weighs 50kg. when it is raised into service position must it always be done by 2 persons.

6 CONSTRUCTION OF THE MACHINE

The flail mower is designed as a remotely controlled self-propelled unit.

The main parts of the machine are:

1. Mower
2. Tracks
3. Motor and hydraulics

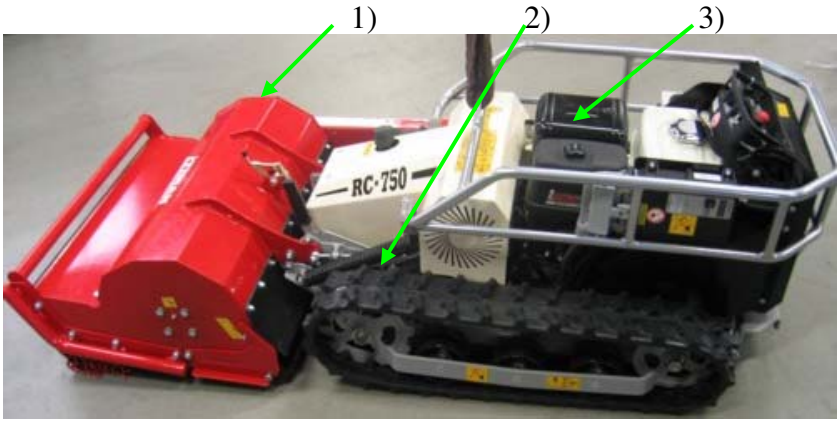

6.1 Mower

At the front of the machine the flail mower is fitted. It is powered by the Honda motor through belts.

The mower is mounted to the chassis on arms such that the mower can move up and down independent of the chassis of the machine. When the mower is in working position, two supporting arms lock the vertical movement of the mower and prevent it from exceeding 15 degrees. The supporting arms are spring suspended in order to shift some of the mower's weight to the chassis. This reduces the friction between the mower and the ground, when the machine is turned.

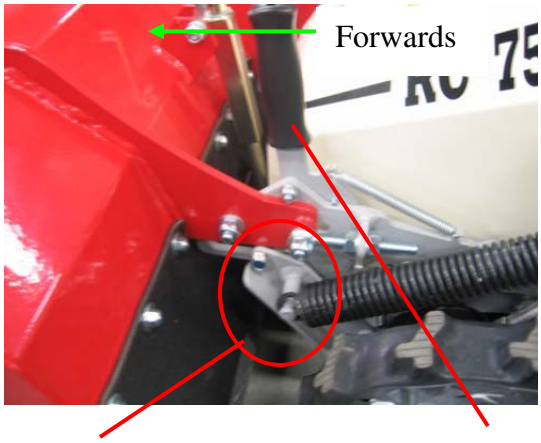

Supporting arms



Mower in service position

Lever for lifting the mower

The mower is raised, when flails need to be replaced or for carrying out service of the mower. To raise the mower, move the lever forwards and then lift it off the supporting arms. In the top position a holding mechanism will lock the arms of the mower in its service position. To return the mower into its working position again, raise the mower slightly and at the same time push the lever forwards. This will disengage the holding mechanism, and the mower can be lowered.

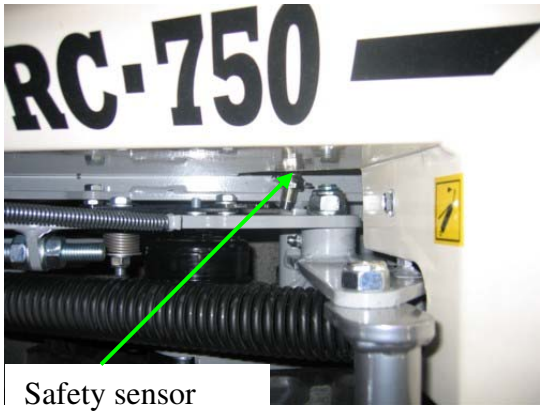

Safety sensor

The machine is mounted with a safety sensor that prevents the mower from being started, when it is in service position.



The mower weighs 50 kg. Two persons should always carry out lifting and lowering the mower.

6.2 Tracks

The chassis of the machine is provided with two hydraulically powered tracks.
The tracks are suspended at the front of the chassis and connected through a triangle with its turning point about the centre of the chassis at the rear end of the machine.
The tracks can move independently of one another, and thereby 100% ground contact of the machine is always ensured, even when driving on uneven ground.

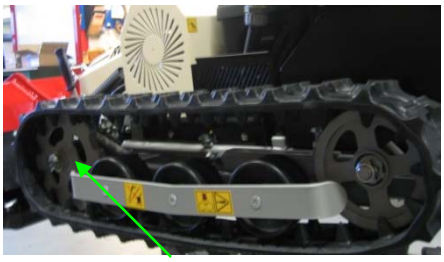

Turning point

When driving in hilly terrain where the soil is loose, rubber spikes can be obtained for the tracks as optional equipment. Thereby the grip of the tracks on slopes will be increased. Look at chapter 11.2



Triangle

6.3 Motor and hydraulics

The machine is equipped with a 15 hp air-cooled Honda motor, which powers the hydraulic pump and the flail mower through a belt drive. In the driving line between mower and motor there is an electromagnetic coupling with springs that automatically disconnect the mower, if the current disappears. The coupling is engaged and disengaged with the remote control.
At the rear end of the machine a suction box is mounted, through which the motor sucks its cooling air.
The hydraulic pump is provided with a fan blade that directs cold air around the pump housing to prevent excessive heating of the hydraulics. A hydraulic oil cooler is also mounted in the suction box.

The speed and direction of the machine is regulated by the quantity of oil that each of the hydraulic motors for the tracks gets from the pump. The oil quantity given by the pump to each of the two hydraulic motors is decided by two servomotors, which are connected to the speed control alarm of the pump. These servomotors are controlled with the remote control.

7 RECOMMENDED OPERATING INSTRUCTIONS

The diagrams below show the basic grass cutting methods in different types of terrain. The operator must, however, each time assess these methods.
During different terrain and weather conditions another method might be better to use than these suggestions. It is the responsibility of the operator to choose the most suitable method. In any case it is absolutely necessary to keep all safety regulations stipulated in this manual.

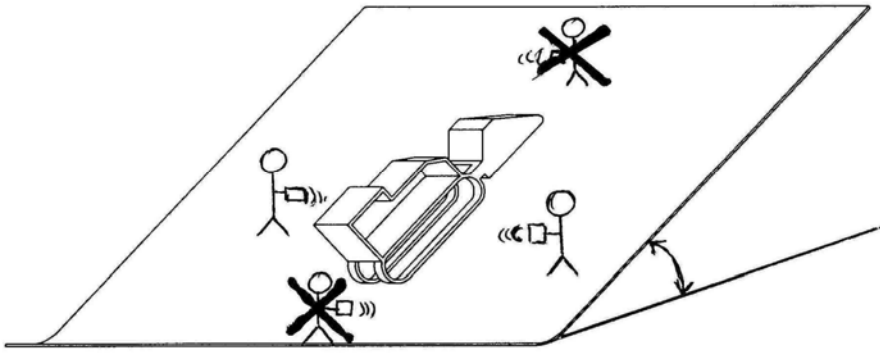

The operator must never be in front of the flail mower when it is running. There he it at risk of getting hit by thrown-out fragments. The operator must never be downhill in relation to the mower unless a safety distance of minimum 12 m is kept from where the inclinations starts. The operator could be hit by the machine, if it turns over.

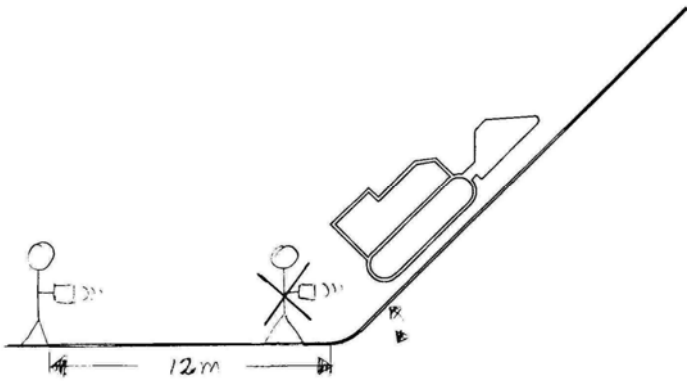

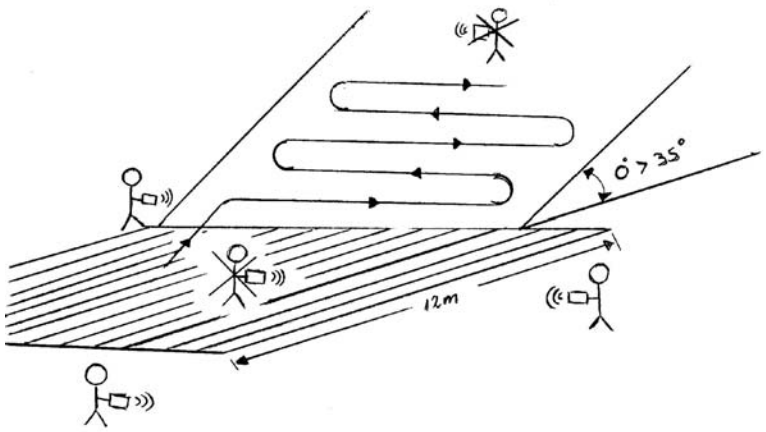

For the operation on slopes with inclinations between 0 and 35 degrees crosswise driving is recommended. At the ends the machine is turned 180 degrees to the driving direction. The operator must stand as shown in the drawing.

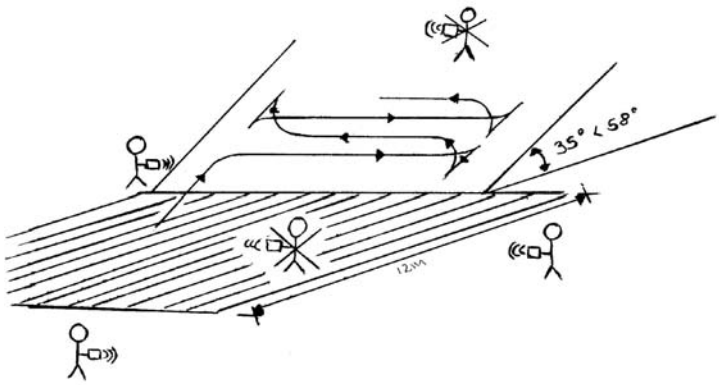

When driving on inclinations between 35 and 58 degrees it is recommended to drive crosswise on slopes.
At the ends the front of the machine is turned toward the hill and at the same run forward and then reversed straight back. Then it is moved forward again to complete the turning.
The operator must stand in one of the positions shown in the above drawing.

It is important that the operator is concentrated and cautious to possible dangers or changes in the terrain when mowing with the machine on slopes. Experiences have shown that it is important to:

- avoid sudden accelerations, quick turnings and hard breakings;
- drive at a slow speed, i.e. below 50 % at the remote control;
- avoid driving in cut-off material, because there the machine can skid;
- be cautious when driving from sunlit to shaded areas, because the ground might be damp there;
- avoid holes and loose ground.

If the operator needs to stop the machine on a slope, the machine must always be placed with the tracks crosshwise on the hill. This will prevent the machine from moving down the slope.

8 STEERING

8.1 Control boxes

The RC-750 is equipped with two control boxes.

Important: The boxes must in no circumstances be washed. If the boxes get damaged, all parts involved must be replaced at once.
The box in the left side of the machine is the NBB control box. With this box the machine's coupling, two servo-motors of the hydraulic pump's speed control arms, tilt sensor, revolutions of the Honda motor, start and stop of the Honda motor and the horn are steered. The box is maintenance free and must not be opened without previous agreement with Timan A/S.



Control box in the left side

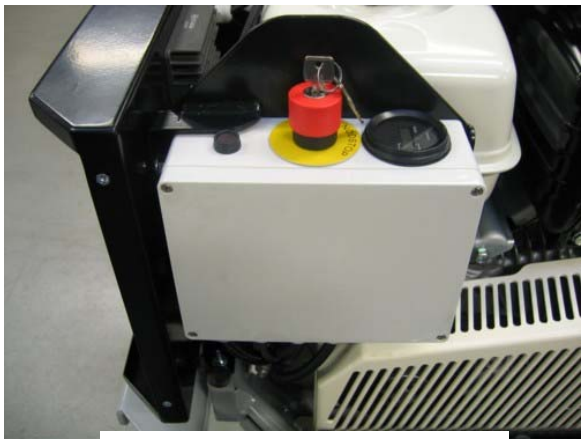

Control box in the right side

The box in the right side of the machine is the Timan control box. This box contains emergency stop, hour counter, fuses and relays, ignition light and current for the NBB control box.
Look in app. 1
IMPORTANT! Never replace fuses with fuses of a higher amp value. Always investigate the cause and rectify the problem, before a new fuse is inserted. The top fuse is F1, the lowest is F4.

F1 Timan box (10 A)
F2 NBB steering (15 A)
F3 Honda motor steering (3 A)
F4 Charge plug (7,5 A)

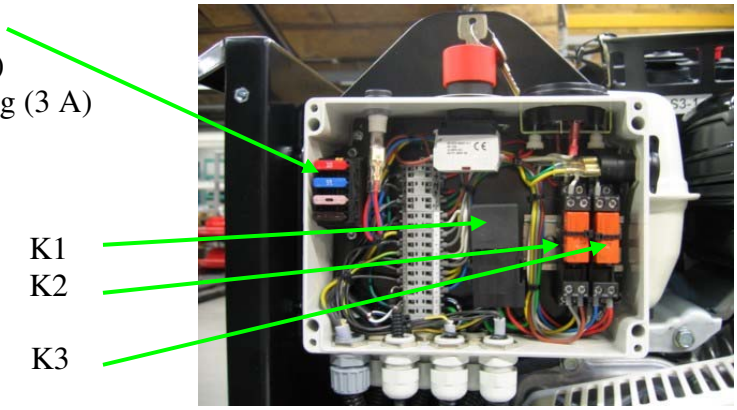

Relays:

K1: Relay for bonding strip 12V 70 amps
K2: Relay for fuel ignition (IGN) / fuel spool (Fs coil)
K3: Relay for hour counter and charge light

8.2 Remote control NBB

Before the machine is started, it is important that the operator has acquainted himself thoroughly in the steering of the machine with the remote control.
The functions are described in detail in section 11.

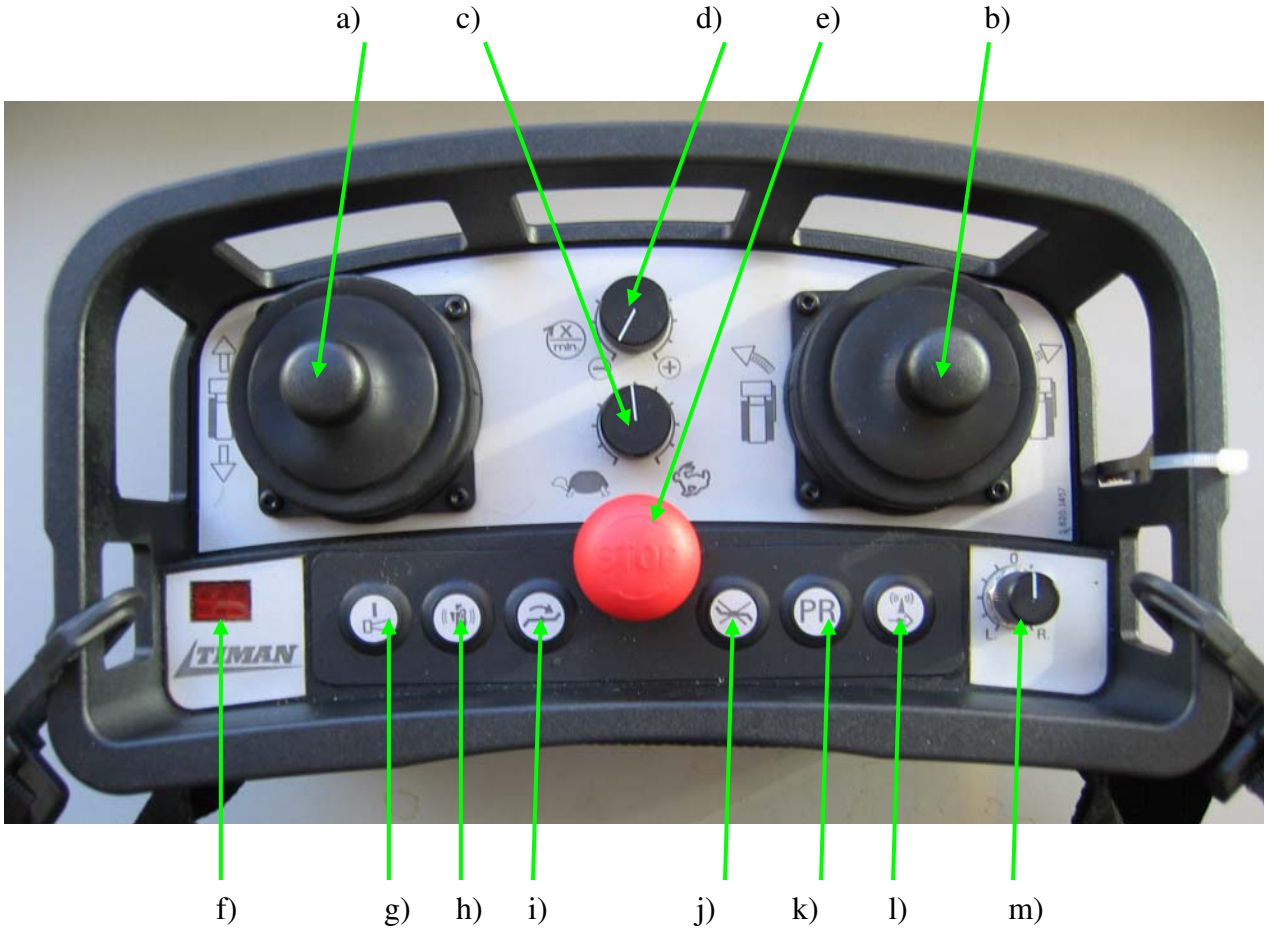

a) Proportional joystick for driving forward/reversing.
b) Proportional joystick for turning right/left.
c) Turning potentiometer for selection of maximum speed.
d) Knob for throttling. During operation (with the mower engaged) 100% gas is given.
e) Emergency stop. This button stops the motor and puts the forward drive neutral. The contact is activated through turning the button clockwise so it jumps out.
f) Diode field. During normal operation a blinking dot appears. If a blinking L shows up, the batteries in the remote control are close to being empty and need to be replaced. Please see below.
g) Horn.
h) Start: the motor starts when this button is activated.
i) Start of mower.
j) Stop of mower.
k) Button for programming.
l) Frequency button.
m) Trimming button.



The battery can be replaced after slackening the finger screw and removing the lid in the rear end of the remote control.



Normal operation – a red blinking light appears.



When a blinking L appears, the batteries are nearly empty – there is approx. 30 minutes of driving time left.

Batteries: Two rechargeable 1,2 V AA NiMH or two 1,5V AA batteries are to be used.

9 RC-750 SAFETY SYSTEM

The RC-750 flail mower is remotely controlled. This means that the operator will at times be away from the machine. In order to increase the safety for the operator and other persons, the machine is provided with a safety system, which can be activated both manually and automatically.

If the mower gets out of reach of the radio signal	Emergency stop is activated automatically
If the radio signal is disturbed	Emergency stop is activated automatically
Another machine is using the same radio frequency	Emergency stop is automatically engaged
If dangerous situations occur	Activate the emergency stop at the machine
	Activate the emergency stop of the remote control
Flail mower is lifted into service position	Safety precautions will prevent the motor from starting
Radio link between receiver and sender is not established	
Defective fuses	
Emergency stop activated on remote control or machine	

If the emergency stop is activated automatically, or if the emergency stop of the remote control is activated, the following happens:

- The motor stops.
- The forward drive is put neutral.
- The coupling of the mower remains engaged, until the motor stands still.

When the emergency stop of the machine is activated, the power to all electric components will be cut and cause the machine to stop.

10 PREPARING THE MACHINE

10.1 Delivery of the machine to the dealer

The machine is in working order when it leaves the factory. It is filled with motor oil, hydraulic oil AND some petrol.
Before the delivery the machine has gone through an end control at Timan A/S, where it has been started up and the functions have been thoroughly tested.
The machine is delivered to the dealer on a pallet or in a wooden crate.

The shipment includes the following parts:

- Remote control
- Key for emergency stops of the machine (two)
- Operator's manual for the RC-750
- Operator's manual for the Honda motor iGX440
- Spare parts catalogue

10.2 Control of motor oil level

Always stop the motor before checking the oil level and before changing the oil.
Please note:
The machine must stand on level ground when the oil level is checked. It is not possible to measure the oil level accurately, if the motor is leaning.
Check the oil level in the motor before it is started or more than five minutes after it is stopped.
The location of the oil gauge dipstick is shown in the picture.
It is important that the oil level is always on maximum level, because otherwise there is a danger that the motor will lack oil when driving is carried out on slopes.
Important: Check the oil level every 4 hours during operation. The motor has no sensor that signals on too low oil level.
Take care that no dirt or water gets into the oil.
Change the oil according to the service plan.
Necessary oil quantity is approx. 1.0 l.

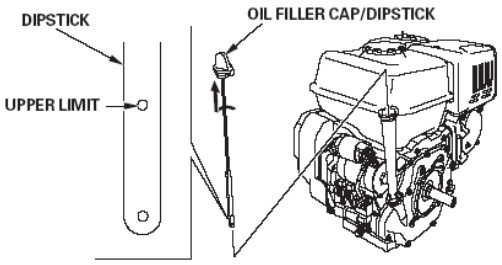

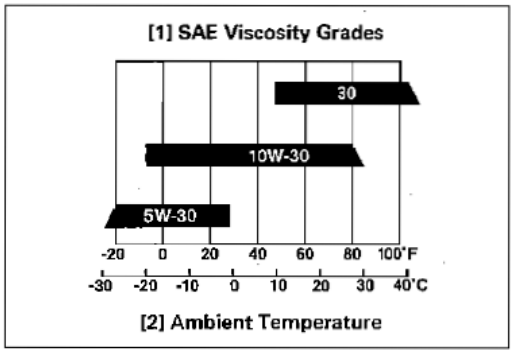

The motor oil must comply with or be better than the requirements according to the API classifications SE, SF and SG.

The temperature of the surrounding area decides, which oil type should be used, but if SAE 5W-30 or SAE 10W-40 is used, the machine can operate in a very broad temperature range from below 0°C to over 40°C.

At the factory the motor is filled with Texaco Havoline Extra semisynthetic easy flowing SAE 10W-40 oil with the API classification SJ.
If you want to fill with an oil of a different trademark, the miscibility with the brand in question must first be checked. If the oil that you wish to change to is not miscible with the above-mentioned oil, the old oil must first be entirely emptied out, before the new oil is filled into the machine.

10.3 Control of hydraulic oil level

Before operating the machine it is important to check if the hydraulic oil level is correct.
The machine must then stand on a level surface.

It is important that the motor is stopped when the oil level is checked.
The hydraulic oil must always stand to the dent in the oil gauge dipstick. Top up with oil if the level is too low. Make sure that no water or dirt gets into the oil. Always clean the area around the oil gauge before it is unscrewed.

Pour the oil slowly and carefully. Remove any spilt oil immediately.
The hydraulic oil tank is filled with Texaco Havoline Extra semisynthetic easy flowing SAE 10W-40 oil with the API classification SJ. Only use this oil type for filling. If you want to use another brand, please contact Texaco first for information about the miscibility.

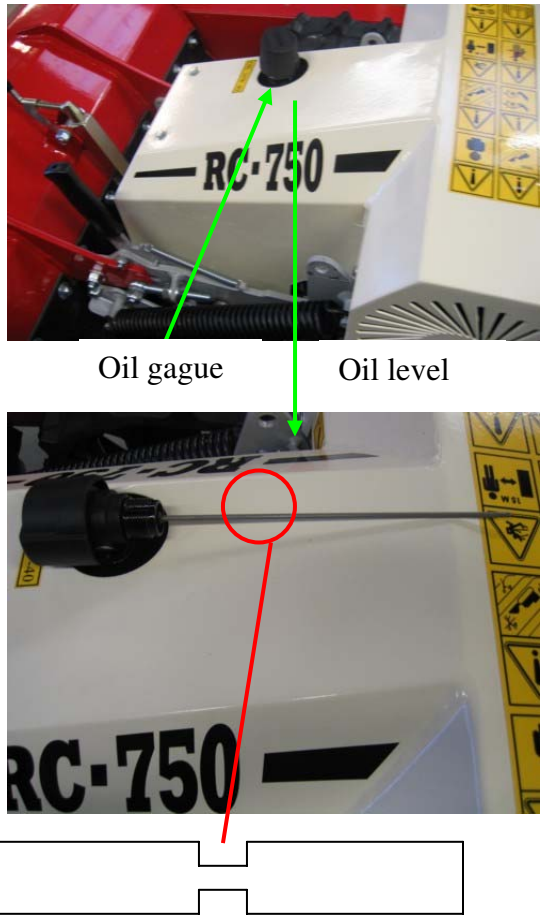

10.4 Control of air filter

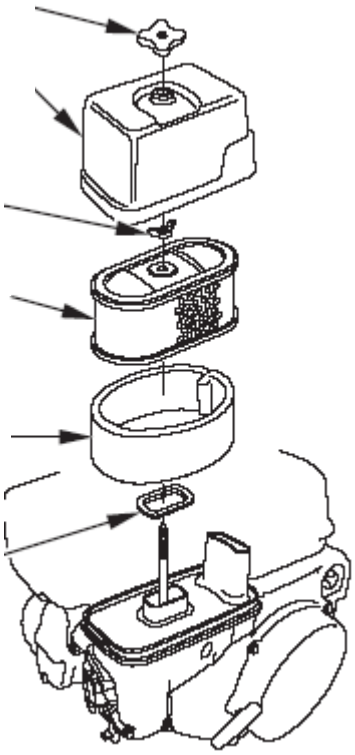

A dirty air filter will reduce the air flow to the combustion chamber and thereby the capacity of the motor.
If the motor is operated without an air filter or with a damaged air filter, will make it possible for dirt to get into the motor, which will result in heavy wearing and breakdown.

The air filter is to be cleaned as follows:

1. Slacken the nut for the air filter guard and remove the guard.
2. Remove grass and other large particles with the hand.
3. Slacken and remove the wing screw for the air filter.
4. Pull the foam filter off the paper filter.
5. Inspect both filters and replace, if they are damaged.
6. Clean both filters, if they are to be used again.

The filters must always be changed as stated in the service manual.

Clean the paper filter through striking it lightly with a hard object so that dirt falls out of the element or through blowing compressed air of maximum 30 psi through the filter element from the inside out.
Never try to brush the dirt off because this will force the dirt into the fibres of the filter.

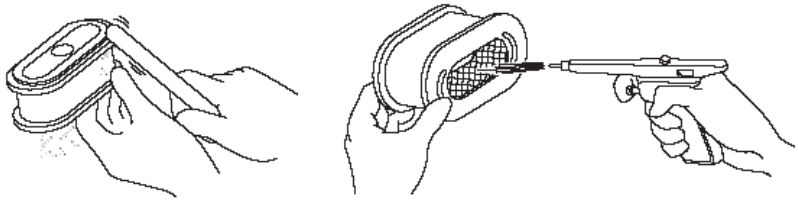

Clean the foam filter element in warm soapy water and then rinse and dry it thoroughly. Dip the filter element in clean motor oil and then press any surplus oil out.
The motor will smoke if there is too much oil in the foam.



Mount the filter again after cleaning in the reverse order to the above description.

10.5 Preparation of the battery



The RC-750 is provided with a 12V 18A battery. The battery can be damaged if it is treated incorrectly. In order to give full effect the battery must be treated in the correct way.

The battery is located under the white guard. Remove the retaining bolts for the guard.

- If the generator of the motor is defective or if the machine has been standing still for a long time, the battery can run low of power. Make sure it is recharged before it is too late.

- The battery is maintenance free during its entire life. That means no distilled water needs to be added. If the battery is heavily surcharged, however, some evaporation can take place, and the battery should then be replenished with distilled water.

- When work is carried out on the battery, the main switch/emergency stop must always be engaged and locked.

- Never disconnect the cables from the battery when the motor is running. It might damage the generator if they are.

⚠ Only use a 12 volt battery for starting aid.

The machine's battery can be recharged directly with a charger connected to the cigarette plug located in the right side of the machine.
A pulse charger is obtainable for the machine as optional equipment. This can be connected all the winter, and thereby the maintenance of the battery will be optimised.

The emergency stop/main switch must always be engaged and locked during charging.

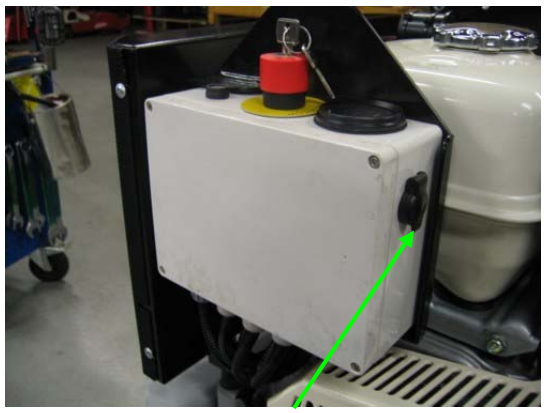

Charge plug

⚠ **Warning**: The machine must never be started when the charger is connected.

10.6 Fuel tank



The motor is certified to run on unleaded petrol with the octane rating 86 or higher.
It is important that the machine stands on a level surface during fuel filling.
It is important that the tank is completely filled before the machine is operated. During operation the tank must be replenished at intervals of 1 hour in order to avoid the motor from running dry.

Fuel filling must take place in a well ventilated area and with the engine stopped. If the motor has been running it is important to let it cool off before fuel filling.

Warning: Petrol is very flammable and explosive, be ware of the risk of getting burnt or serious injured. Open fire during filling is strictly prohibited.

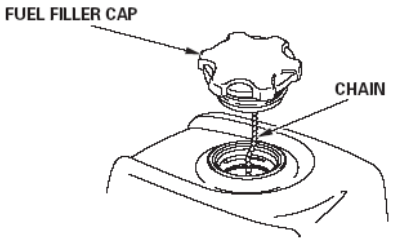

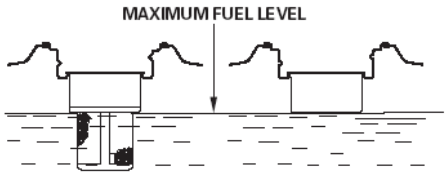

It is important not to spill any fuel during filling because the painting and certain types of plastic can be damaged. A hopper should always be used for fuel filling.
Do not fill more fuel into the tank than the maximum level shown in the picture.

Never use fuel that is too old, polluted or mixed with oil.
Avoid getting dirt or water into the fuel tank.

11 OPERATION OF THE MACHINE

11.1 Using a new machine

The life of a new machine depends on the way it is operated and maintained. New machines directly from the factory are of course thoroughly tested, but the different parts are not jet adapted to one another. It is therefore important to drive at a reasonable speed and avoid extreme strain during the initial 50 hours of operation, to allow all parts to run in.

The life of the machine depends highly on the way the machine is taken care of during the running-in period. The running-in is very important for an optimum output and lifetime of the machine. The following precautions should therefore be taken:

Running-in period.
Change motor oil and hydraulic oil filter after the first 20 hours of operation.

11.2 Controls to be carried out before start

1. Check if there is enough petrol in the fuel tank (octane 86 or higher).

2. Check the hydraulic oil level – must stand to the mark at the oil gauge dipstick.

3. Check the motor oil level. The oil must stand to the maximum level.

4. Check if the flails of the mower are undamaged. Replace any damaged flails. Driving with damaged flails can cause imbalance of the mower and an unsatisfactory mowing result.

5. Clean the air filter of the motor.

6. Check the V-belts and lubricate bearings and bushings according to the lubricating schedule.

11.3 Start of the machine

After the machine has been started it is important to let the motor run idle for minimum 2 min. This particularly applies in very cold weather.

Insert the key in the emergency stop/main switch of the machine. It is positioned in the right side of the machine. Turn the key and the knob is pushed up. Now the ignition light to the left of the emergency stop is lit.

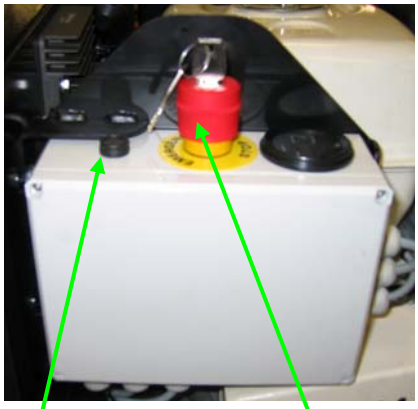

Ignition lamp

Emergency stop/main switch

Please note: The motor cannot be started if the mower is in service position.

The starting sequence is shown in the picture below:



2.) The throttling is set to 0%

1.) Turn the emergency stop/main switch. A small dot appears on the display. The horn sounds a beep to signal that sender and receiver of the remote control are connected.

3.) The horn is activated briefly

Display

4.) Activate the starter button. Release the button as soon as the motor starts.

The motor has an automatic choke and regulates the extra quantity of fuel it needs for the start automatically. Never try to activate the choke contact in the left side of the motor during attempts to start the motor.

Important: The motor must never run more than 5 sec. from the self-starter because it will heat and can then be damaged.
Before a new attempt to start the motor again, at least 10 sec. have to pass.

Warning: Keep a distance to the machine when it is started.

11.4 Stop of the machine

Make sure that the machine stands on level ground before stopping.
Reduce the throttling to a minimum, before stopping the motor.

1. For parking, the emergency stop on the remote control is activated.
2. Activate the emergency stop/main switch at the machine and remove the key. Unless the main switch is activated and locked, the machine will start beeping after 10 sec.

The machine begins to beep to remind the operator that he should remove the ignition of the machine and as a safety precaution to prevent unauthorized persons from starting the machine.

If the motor has been working under heavy strain it is important to let the motor run idle for 2 min. before stopping it.



Warning: Stop the motor immediately:

1. if the motor revolutions are suddenly reduced or increased;
2. if the colour of the exhaust gas changes;
3. if you hear a sudden unusual sound;
4. if the mower of the machine begins to shake/vibrate.

11.5 Start/stop of mower

The mower can only be activated when the motor is running.
Check before connecting the mower that the cutting height is correctly set.
The mower must never be connected in high vegetation. This could damage the coupling.
Always connect the mower on an area with short grass and then drive it to the higher vegetation.

Warning: Keep a good safety distance to the machine when the mower is started. Never start the mower, if there are other persons around. Respect the safety distance of 15 m from the mower. The mower can throw fragments out in front of it.



Start mower Stop mower

When the mower is connected, the revolutions of the motor will automatically change to 1900 rpm. After the connection the revolutions are changed to the preset value on the remote control.

11.6 Mowing height

The mower has a carrying roller mounted at the rear. This roller is adjustable with the screw between 30 and 110 mm mowing height.
Adjustment takes place after tilting the locking yoke away from the grip. Then turn the grip counter clockwise to increase the cutting height – and clockwise to reduce the height.
Remember after adjustments to tilt the locking yoke back in over the screw.
The height adjustment is provided with a stop so the 110 mm height cannot be surpassed.
The mower can be equipped with two different types of flails: playing field flails or Y-flails. Both types are movably suspended in shackles.
The playing field flails are often used on finer surfaces, where a good-looking end result is required. The Y-flails are well suited for high grass on rough surfaces.

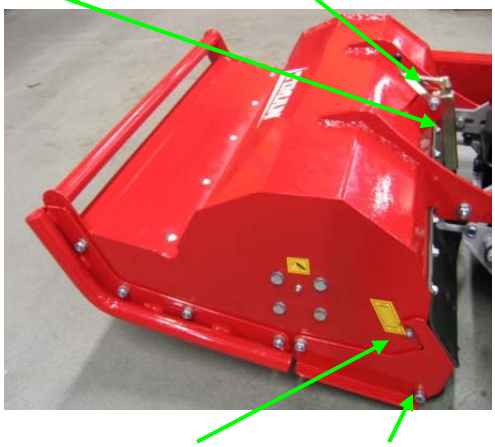

The flail mower is designed and approved according to the EN 745 stipulations, and therefore other flail types than those prescribed must not be used. Replace the rubber or the chains at the mower front at once, if they get damaged, because otherwise there is an increased risk of fragments being thrown out in front of the mower.

On the left side of the mower there is a sticker indicating cutting heights, on a scale between 1 and 7.
The table shows the cutting heights for Y-flails and playing field flails respectively. It is a precondition that the mower is standing on a hard, flat and even surface when the height is adjusted.

The machine is standard supplied with playing field flails.

	Y-flail	Playing field flail
Min	40	30
1	50	40
2	60	50
3	70	60
4	80	70
5	90	80
6	100	90
7	110	100
Max	120	110

Warning: It is not allowed to remove the stop because the machine will then not live up to the safety requirements according to the standard EN 745.

The recommended cutting height varies a great deal as it depends on the terrain, type of surface, flail type and height of the vegetation. But it is important always to set the height in such a way that the flails never touch the ground because this might damage the machine and reduce the life of the flails.

Warning: The cutting height must never be adjusted when the motor is running.

11.7 Operating the machine

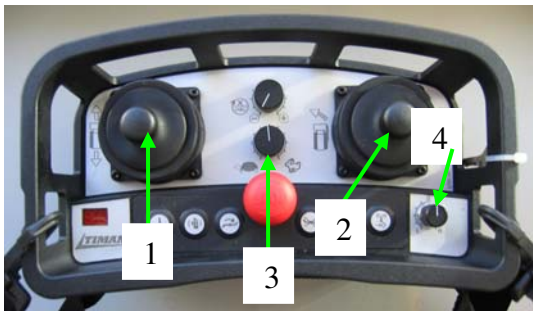

The machine is controlled with joystick [1] for driving forward and reversing. Joystick [2] controls the machine's turnings (please see the symbols on the remote control).
Joystick [2] can be used without activating joystick [1]; thereby the direction can be adjusted (right or left), before joystick [1] is activated.

Always select a driving speed that gives a good mowing result. Always start driving slowly and then increase the speed.

Warning: Never drive so fast forwards that the motor revolution drops. This might cause the motor to run warm and become overloaded and result in a breakdown.

With turning knob [3] the maximum forward speed is decided.
The speed is adjustable from 25 % to 100%, which corresponds to a forward speed between 1.5km/h and 6 km/h.

Warning: During mowing, the speed must always be controlled with the joysticks or the speed control knob. Never use the throttling to reduce the driving speed.

When driving on sloping ground it is recommended to drive 50% slower than maximum speed.
From 0-60 % the tracks will run in opposite directions when joystick [2]) is activated 100%.
From 60% to 100% one track will stop on full activation with joystick [2].

Should the machine turn somewhat to the right or left during the operation, this can be adjusted though turning the trimming button [4]. Turn the button counter clockwise if the machine runs towards the right side.
The position of the trim button depends on the forward speed of the machine. Start therefore by adjusting the machine to the required forward speed. Then trim the straightforward drive.
When driving crosswise on slopes, the machine will try to steer down the hill. Adjusting with the trimming button can counteract this.
The trimming button is not factory adjusted for straight driving, when the button is set to 0.
It is important always to start driving with the machine on a flat and level surface. The degree of difficulty should not be increased until a good driving experience is reached.
The motor should always to run at maximum revolutions, when the mower is connected.
In cold weather the motor should run idle for 2 min. before driving in order for the oil in the motor and the transmission to warm up.

11.8 Programming of position 0

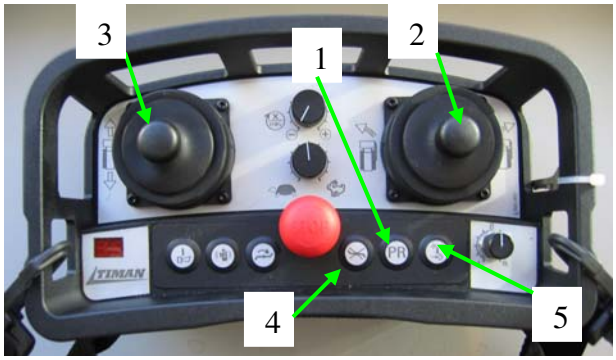

The machine is preset at the factory to stand still when the joysticks are released.
Should this change after a time, the 0 (zero) position can be reset through programming the remote control.
Before this function is used, both tracks must be lifted 5 cm above the ground with a truck or the machine lifted in its lifting eye.
Then start the machine and set the revolutions to 20%.

Resetting to the 0 (zero) position takes place as follows:

1. Activate the PR [1] button for 3 sec. PR appears on the display.

2. For adjusting the left track, move joystick [2] to the left and release it again.

3. Then activate joystick [3] in steps. Move the joystick from position 0 and all the way forward if the track reverses, and then release it. If the track is running forward the joystick should be moved backwards. Repeat this in steps until the left belt is standing still. Then press button [4] and the setting is saved.

4. For adjusting the right track, move joystick [2]) to the right and then release it.

5. Then joystick [3] is activated in steps. Move the joystick from position 0 and all the way forward, if the track is reversing, and then release it. If the track is running forward, the joystick should be moved back. Repeat this in steps until the right track is standing still. Then press button [5], and the setting is saved.

6. Activate the emergency stop at the remote control.

11.9 Change of frequency

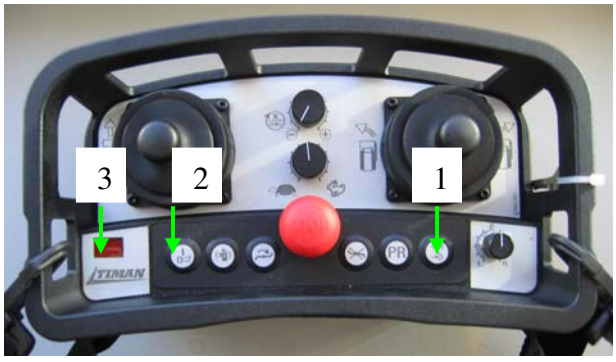

If the machine's remote control signal is disturbed, the machine will automatically stop. In order to continue the operation, channels must be changed at the remote control.
This is carried out through holding button [1] down and at the same time activate button [2].
Thereby the channel numbers are changed.
When a new channel is selected, the horn signals with a short beep that the change is made.
The channel number appears in the display [3].

11.10 Transport of the machine

It is important to use a suitable vehicle for transport of the RC-750. Make sure that the machine stands on a solid, level surface and is securely fastened with suitable straps. Secure the machine to the truck bed in the machine's guards (please see the picture).

The machine can move by itself onto the transport means through chutes. Make sure they do not skid or slide when the machine is loaded.
Alternatively the machine can be lifted onto the vehicle, see section 11.13.
It is not allowed to go under the machine when it is lifted.
Driving the machine on public roads is not allowed.

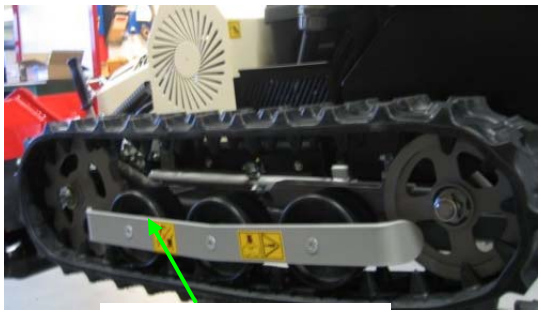

Guard for securing machine on truck

11.11 Towing of the machine

It is possible to tow the machine, if the machine's hydraulics should fail to work, or if the motor cannot start.
Then the guard above the pump is to be dismounted and the two towing bolts are each turned twice with a single end wrench. The machine can then be pushed by hand.
After the towing, tighten the towing bolts again with 14Nm.

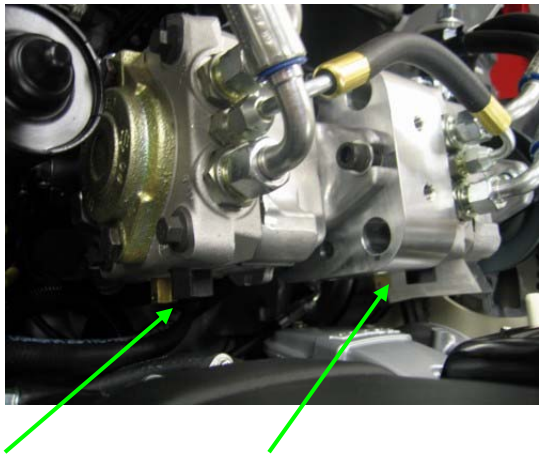

Towing screw, right pump

Towing screw, left pump

Please note: There are two bolts in the right side of each pump. It is the lower "gold" coloured bolt that is used for towing purposes.

Warning: The towing bolts must only be slackened with the machine standing on flat and even ground. If they are slackened, when the machine stands on a slope, the machine might move.

Warning: Do not slacken the towing screws until the motor has cooled down. The exhaust manifold is located close to the bolts and poses a risk of getting burnt.

11.12 Lifting of the machine

The machine is equipped with a combined lifting yoke and branch guard. For the lifting of the machine it is important that the lifting equipment employed is approved for lifting minimum 300 kg. Place a hook or lifting strap as shown in the picture.





Lifting eye

11.13 Description of tilt sensor

A tilt sensor is mounted at the rear end of the machine behind the hydraulic cooler. This sensor has two purposes:

1. Protection of the motor. The motor is approved and tested for driving on slopes of maximum 58 degrees. If the motor runs at an inclination above 58 degrees, the motor will loose its lubrication capacity and break down.
2. Protection of the machine against tipping over.

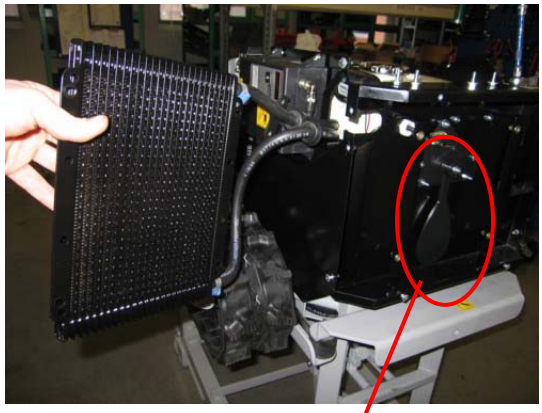

The sensor functions through a pendulum that is activating a contact. When the contact has been active for more than 1 sec., the machine will begin to beep, and at the same time the mower will be disconnected.

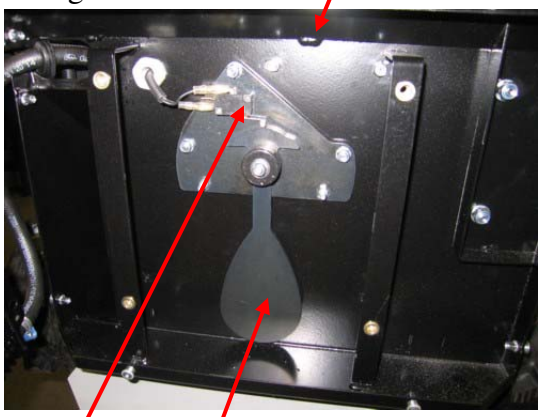

Contact Pendulum

Warning:
The sensor will not have time enough to react before the machine tips over, if the machine runs into a hole or skids on a slope.

12 SERVICE AND MAINTENANCE

12.1 Lubrication of the machine

Bushings: Timan A/S recommends special grease from Statoil, Greaseway CaH 92, intended for slide bearings.
Bushings: To be lubricated every 20 operating hours.

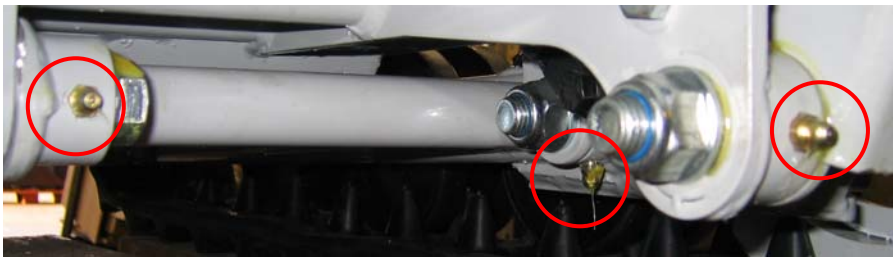

Under the machine front, right side: 3 pcs.



Under the machine front, left side: 3 pcs.

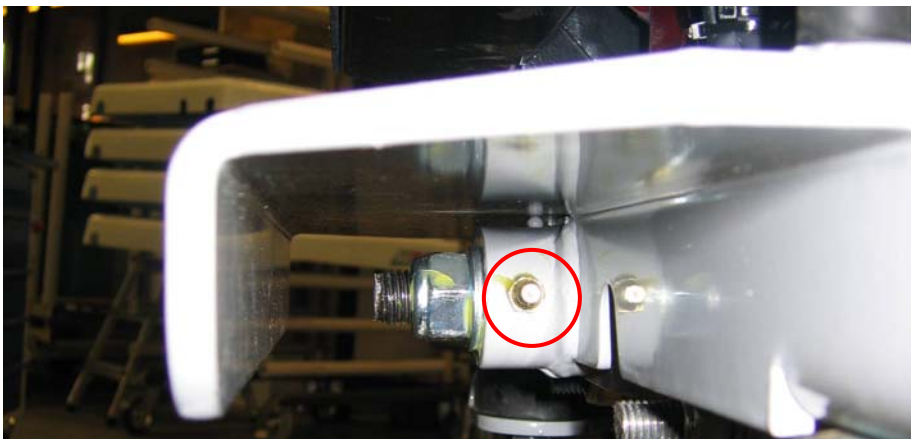

Behind the machine under the triangle: 1 pce.

Bushing for mower 1 pcs. in right and left side respectively.

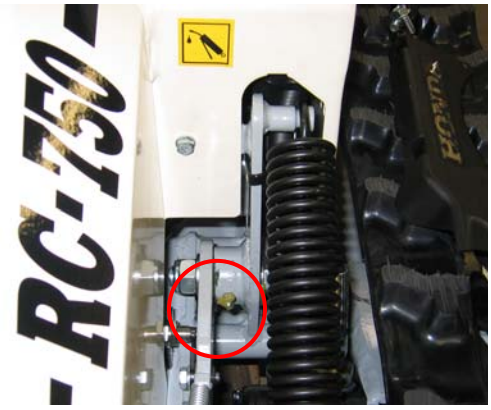



Ball bearings: Timan A/S recommends the use of grease from Statoil: Uniway LI 62 intended for ball bearings.

Bearings in the mower: Lubricate every 8 operating hours.

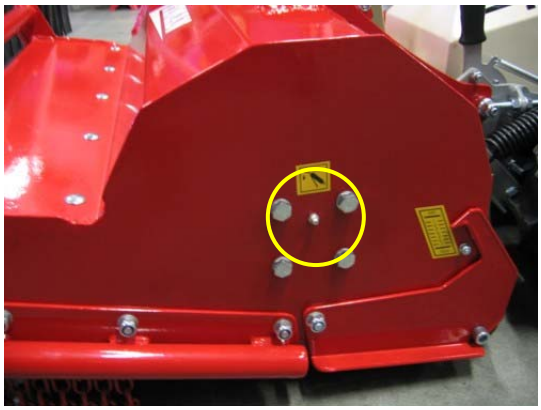

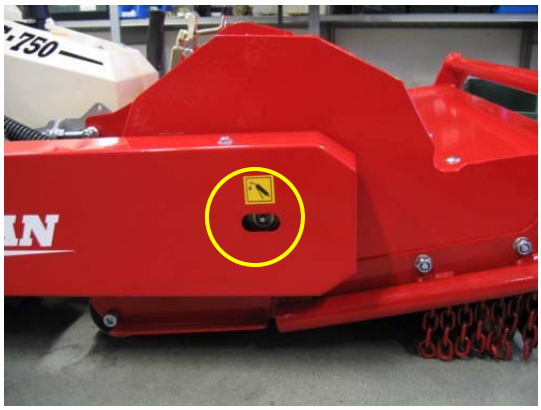

Flanged bearings in driving shaft: Lubricate every 8 operating hours.





12.2 Change of transmission oil and filter

Change of transmission oil and filter is to be carried out in the following way:

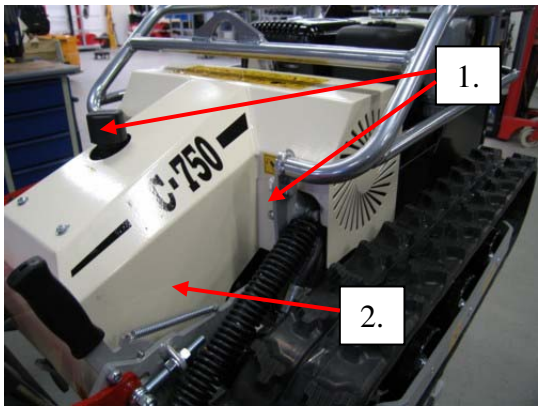

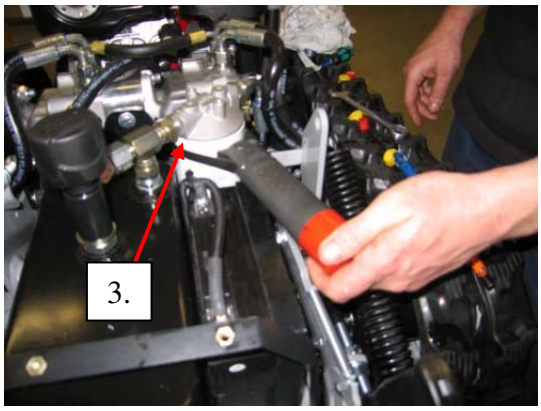

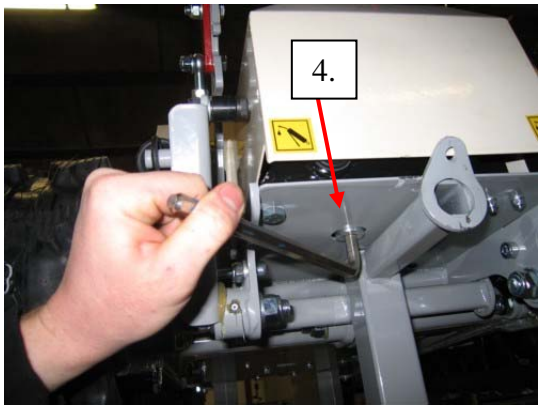

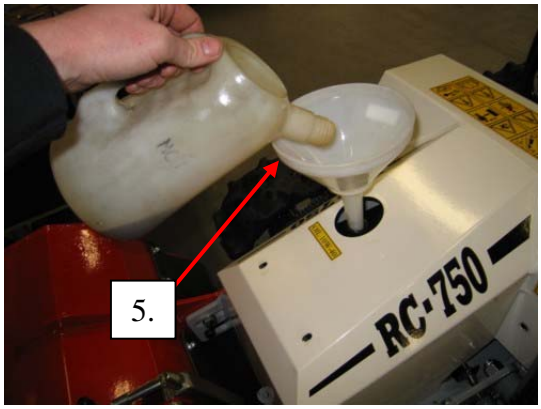

1. Dismount the branch guard, slacken the two bolts indicated by the arrow, and tilt the branch guard to the back.
2. Dismount the guard over the hydraulic oil tank.
3. Change the oil filter. Remember to lubricate the seal with oil, before the new filter is mounted.
4. Loosen the plug and drain the oil out. Tighten the plug again after draining.
5. Refill with approx. 6 litres of 10W40 oil.

Start the machine and let it run for approx. 2 min, then top up with oil.

12.3 Change of motor oil

Motor oil is changed after loosening the drain plug, draining the oil out and retightening the bottom plug. Then fill with approx. 1 litre of motor oil 10W40.





12.4 Tightening and maintenance of drive belts

In order to ensure that the belts are correctly adjusted and maintained, a belt tension tester is supplied with the machine. Operating the machine with too slack belts will reduce the life and efficiency of the belts heavily and at the same time cause heavy wearing to the pulleys. If the belts are too tight, there will be an increased wearing to the bearings of the machine. The belt tension tester works in the following way:

1. The transmission is turned a few times to spread the tension over the entire belt, before measuring takes place.
2. The tension tester is placed on top of the belt and between the pulleys. The pointer is pressed down into the scale.
3. The tension tester must only be used with one finger.
4. Activate the tension tester with a slowly increasing pressure until a click is heard/felt. Stop pressing at once.
5. Remove the tension tester from the belt and the tension can be read at the intersection point between the scale and the front edge of the pointer.
6. Adjust the belt tension until the measured value is identical with the tension shown in the below table. Remember to turn the transmission a few times after each adjustment to make sure that the belt tension in the belt section close to the pulley is the same as that of the entire belt

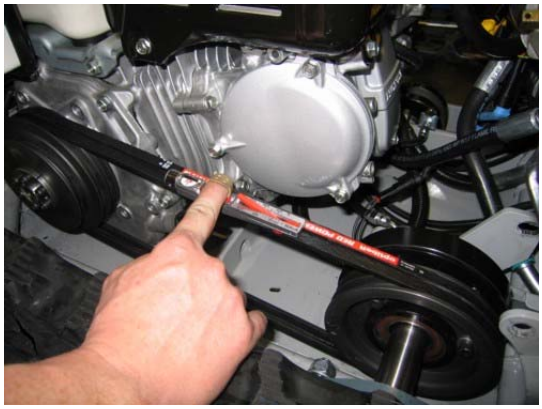

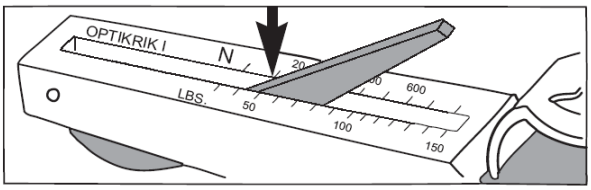

Static belt tension (N)	New belt	Run-in belt
Belts between motor and coupling	375	300
Belt between motor and pump	250	225
Belts between coupling and mower	375	300

Tightening of belt between motor and coupling

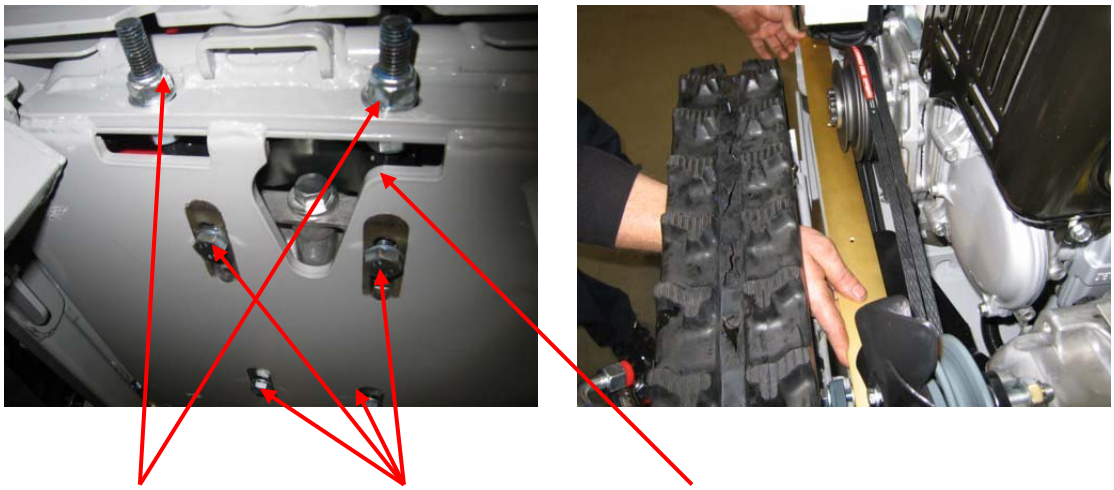

Adjustning nut for belt tightening

Siting of motor bolts

Lock nut

Tighten the belts in the following way:

1. Slacken the four bolts that are holding the motor.
2. Slacken the lock nuts in the adjusting mounting.
3. Adjust the nuts until the correct belt tension is obtained.
4. Check with a guide rail if the pulley of the motor is parallel with the coupling. If it isn't, adjust with the nuts. Then check the belt tension.
5. Retighten the motor bolts and the lock nuts.

Tightening of belt between motor and hydraulic pump

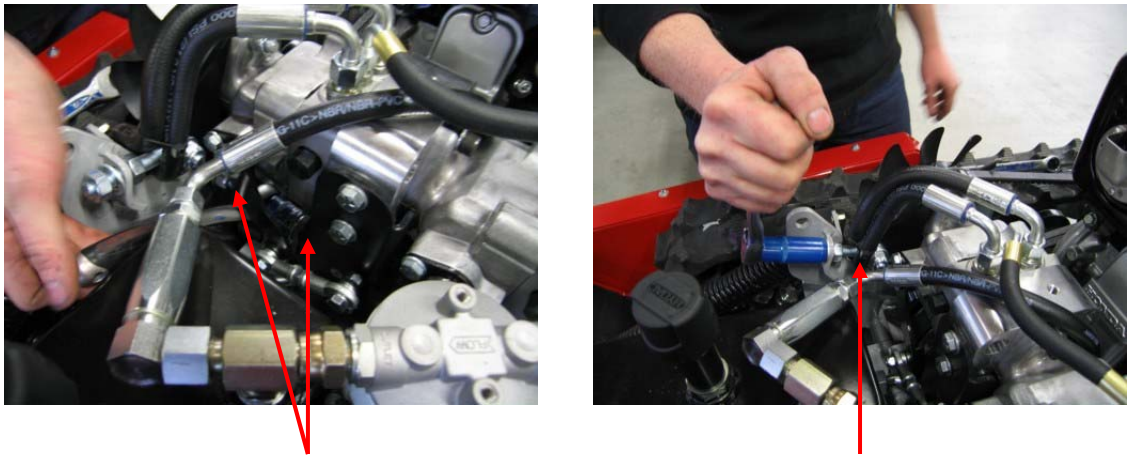

Bolts for pump

Adjusting bolt

Tightening of the belt is carried out the following way:

1. Slacken the two bolts that are holding the pump.
2. Slacken the lock nut on the adjusting bolt.
3. Adjust the nut on the adjusting bolt until the correct belt tension is obtained.

4. Retighten the pump bolts and the lock nuts.

Tightening of belt between coupling and mower

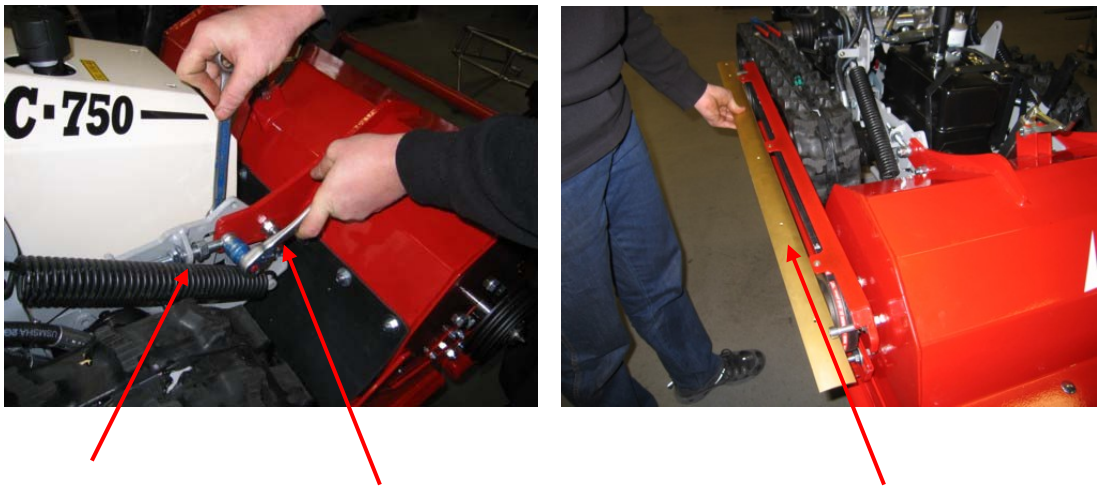

Adjusting bolt Bolts for mower Guide rail

Tightening of the belt is carried out the following way:

1. Slacken the four bolts that are holding the mower, two in each side.
2. Slacken the lock nuts on the adjusting bolts.
3. Adjust the nut on the adjusting bolt until the correct belt tension is obtained.
4. Check with a guide rail, if the pulley of the mower is parallel with the coupling. Adjust with the nuts if it isn't. Then check the belt tension.
5. Retighten the bolts and lock nuts for the mower.

12.5 Change of flails

The machine can be equipped with two types of flails: Y-flails and playing field flails. It is important to check the following points before starting machinery:

- The number of flails: 32 Y-flails or 16 playing field flails.
- That the shackles can move freely in the bushings of the flail rotor.
- The wearing of the flails. Replace them if they are worn.

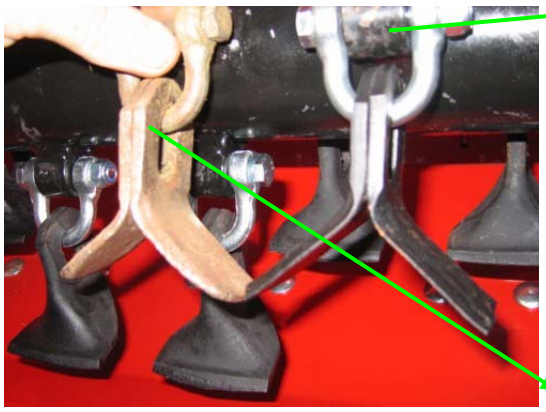

The picture shows a new and a worn Y-flail. During replacement also check the shackle for wearing in the flail's suspension point and replace the shackle, if there are signs of wearing. When flails are replaced, always also replace the suspension bolts and the lock nuts for the shackles.



The picture shows a new and a worn playfield flail. During replacement always also check the shackle. Replace bolts and lock nuts.

Always replace the flails before they are too worn. New flails give the nicest mowing result. Adjust the mower's height after the conditions, and never allow the flails to touch the soil.

Important: All flails must be replaced at the same time because otherwise the flail bar will become imbalanced. When the flails are changed, always also replace the bolts and lock nuts.

Warning: Worn bolts can cause the flails to fall off and make a danger.

Warning: Never run machine with missing or damaged flails

12.6 Tightening of the tracks

It is important that the tracks of the machine are correctly tightened. Too slack tracks might result in the tracks coming off when the machine is running on slopes. If the tracks are too tight, this will cause an increased wearing of the oil motor and bearings.
Measuring if the tracks are correctly tightened is carried out with a measuring tape placed at the middle carrying roller, where the value 210 mm is read. Then press on top of the track right above the middle track roller and read the value on the measuring tape. With a correctly tightened track the value is then 180mm.



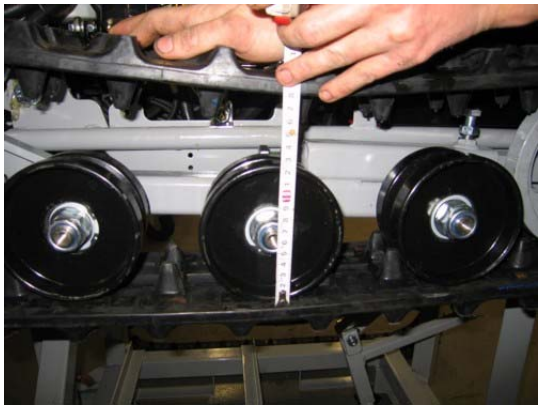

Adjust as follows if the track is too slack:

1. Slacken the lock nuts.
2. Slacken the rear locking bolt.
3. Screw the adjusting screw in to tighten the track.

After the adjustment, check the track tension again and retighten locking bolt and lock nuts.



12.7 Mounting of spikes

Spikes will increase the grip of the tracks when driving on slopes. They are obtainable for the tracks as optional equipment.
The spikes are mounted between every four track pattern as shown in the picture.



Push the fitting in from both sides of the track and tighten the bolt.

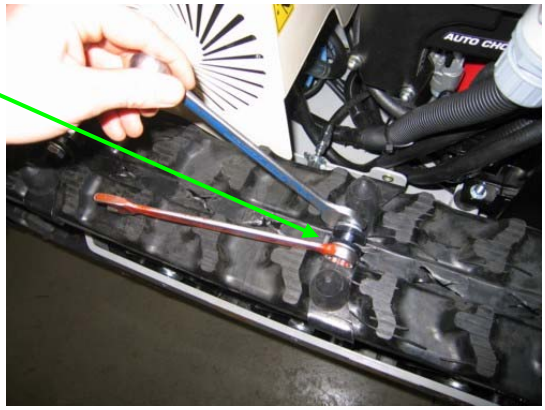

One spike kit includes:

- 14 inner spikes with fittings,
- 14 outer spikes with fittings,
- 14 pcs M10x25 bolts,
- 28 pcs M10 discs,
- 14 pcs M10 lock nuts.

12.8 Cleaning of the machine

It is important to clean the machine thoroughly every day to prevent grass and dust particles from posing a potential risk of fire. This specially applies to the motor compartment around the drive belts.
In order to prevent heating of the hydraulic system, cleaning of the grates, in the side of the guard above the hydraulic pump and at the rear end of the machine, and removal of grass and dust regularly during the day is important.



Important: The machine must not be cleaned with high-pressure because then there is a great risk of damaging the bearings and the electric components.

12.9 Torque moments

A correct tightening of the bolts and screws of the machine is important in order to prevent that its vibrations slacken them. Please see the below table.

Bolt type 8.8 qual.	**M3**	**M4**	**M5**	**M6**	**M8**	**M10**	**M12**	**M16**	**M20**
Moment Nm	1,5	3	6	10	24	47	81	197	385

Important: All bolts that are not locked with a locking bolt must be provided with Loctite (thread securing).

Important: When the Honda motor is repaired, the torque moments stated in the motor manual are to be followed.

13 FAULT LOCALISATION

Problem	Possible error	Possible solution
Motor runs with the self-starter, but it doesn't start	Spark plug [*1]	Check distance or replace spark plug
	Wire damaged	Replace or repair wire
	Fuel filter clogged [*1]	Clean filter in carburettor
	No fuel [p.26]	Refill fuel
	Vacuum valve under fuel tank	Replace valve
	Motor ECU [*1] is blinking	Find fault as described in motor manual
	Mower is in service position [p.14]	Put mower into working position
	Defective NPN sensor [p.14]	Replace sensor
	Distance too big for NPN sensor [p.14]	Adjust sensor – until diode is lit
	Defective K2 relay [p.18]	Replace relay
Motor is not running from self-starter	Battery discharged [p.25]	Charge the battery
	No light in ECU lamp [*1]	Check 3 A fuse
	Defective 30 A fuse	Replace 30 A fuse at rear of motor
	Gas potentiometer not in 0-position [p.28]	Turn potentiometer into 0-position (zero)
	Horn has not been activated [p.28]	Activate the horn
	Defective 10A, 15 A, 3A fuses [p.18]	Replace the fuses
Motor is smoking	Air filter [p.24]	Clean / replace air filter
Mower will not start	Defective K3 relay [p.18]	Replace relay
	Coupling defective	Replace coupling
	Check wire and plug	Replace wire or plug
	Defective drive belt for mower [p.39]	Replace belt
	Defective drive belt for coupling [p.39]	Replace belt
Mower stops	Tilt sensor is active [p.35]	Move to a flatter area
Machine cannot run	Defective servomotor	Replace servomotor
	Drive belt damaged [p.39]	Replace belt
Mower vibrates	Defective bearings	Replace bearings in mower
	Dirt on flail bar	Clean flail bar
	Flail missing [p.42]	Mount new flail
	Worn flail [p.42]	Mount new flails
Machine has not enough pulling power	Damaged hydraulic pump	Replace pump
	Drive belt is slack [p.42]	Tighten belt
	Hydraulic motor defective	Replace hydraulic motor
	Oil is overheated [p.45]	Clean cooler, rear grate and guard grate over the hydraulic pump
	Not enough transmission oil [p.23]	Refill oil
No contact between remote control and receiver	Machine outside operational range	Move remote control closer to receiver
	Disturbing radio signal [p.33]	Change frequency
	Emergency stop of machine engaged	Disengage emergency stop
	Defective 15A fuse [p.18]	Replace fuse
	Emergency stop of remote control engaged	Disengage emergency stop
Machine makes noise	Defective flanged bearing by coupling	Replace bearing
	Defective guard bearing	Replace bearing
	Defective bearings in mower	Replace bearings
Poor mowing result	Worn flails [p.42]	Replace all flails
	Driving speed too high	Lower the speed
	Incorrect flail type [p.31]	Change flail type
Horn without function	Mower is in service position [p.14]	Put mower in working position
	Defective 3A, 10A, 15A fuses [p.18]	Replace fuses
Horn automatically activated	Tilt sensor is activated [p.35]	Move to a flatter area
	Emergency stop of remote control activated, emergency stop of machine not activated	Activate emergency stop of machine

[*1] See motor manual

14 MAINTENANCE AFTER THE SEASON

When the season ends, or if the machine is not to be used during a month or more, it is recommended to prepare it for storage.
Please follow the below mentioned important steps:

- Clean the machine thoroughly, especially the mower.
- Replace worn parts.
- Lubricate the inside of the mower with oil to prevent it from corroding.
- Retighten screws and bolts.
- Check if the bearings are worn, replace them if they are.
- Lubricate the machine according to the lubricating plan.
- Dismount the battery and store it in a dry and warm place.
- Store the remote control in a dry and warm place.

15 GUARANTEE STIPULATIONS FOR THE RC-750

Regarding the petrol motor:

It is a condition for the guarantee that the service intervals are strictly kept. Any inquiries in this connection are to be directed to the service department at your local dealer or importer or the service department at TIMAN A/S.

1st service	10 to 20 hours
Thereafter every	100 hours

Responsibility for defects in the article:

1. Any parts which turn out to be unfit for use or are found to have considerably reduced performance due to circumstances before the handover – in particular poor quality of manufacture or material - will be repaired or exchanged free of charge, at the option and reasonable estimation of the supplier. The supplier is to be informed immediately in writing, when such defects are observed. Exchanged parts become the property of the supplier.
   The guarantee period is *1000 operating hours or 12 months*, whichever comes first. The responsibility of the supplier ceases 12 months after the article has left the supplier's factory or at the latest after the machine has finally been taken over by the customer.
   For significant parts of other origin the responsibility of the supplier is limited to the guarantee granted by his supplier.
   Service book and service plans must be followed and provided with valid stamps in order for the guarantee to be in force during the guarantee period.

2. The supplier is not responsible for damages due to:
   Unqualified or unskilled operation, incorrect mounting or starting up carried out by the customer or third party, natural wear, incorrect or careless handling, unfit working means,

the use of non-genuine parts, faulty repair, chemical or electric influence, or any other defect which cannot be traced back to the supplier.

3. For carrying out of all necessary improvements and replacement supplies according to the reasonable estimation of the supplier, the customer must, after agreement with the supplier, allow the time and occasion necessary for the supplier. Otherwise the supplier is released from his responsibility. Only when there is imminent risk of the working safety or for the prevention of disproportionately greater damage, in which cases an agreement has to be made with the supplier at once, the customer is entitled to repair the breakdown himself or have it repaired by a third party and then demand a previously agreed compensation from the supplier.

4. For all approved claims the supplier undertakes the expenses of spare parts incl. of freight as well as adequate labour costs at the suppliers known rates. Further, if it on some occasions can be demanded, also the costs of assistance from servicemen, whom he may have to make available. Other costs are the responsibility of the customer.

   Claim reports that are incorrectly completed will not be processed.
   Repairs are to be carried out immediately and not later than 14 days from the date of the damage.
   Claim reports not received by the importer eight days after the execution of the repair at the latest will not be approved.

   Claim parts returned on the request of Timan A/S must be at the factory not later than eight workdays after the receipt of replacement parts. Returned parts can only be approved, if they are provided with the mark and number of the claim report.

   Any complaints of decisions in connection with claims are to be advanced not later than three weeks from receipt of the treated claim.

5. Spare parts and repairs carried out by the supplier are guaranteed for 3 months. However, the guarantee runs at least till the end of the original guarantee period for the delivery.

6. The supplier has no responsibility whatsoever for the consequences of any unskilled changes or repairs carried out by the customer or third party without previous agreement with the supplier.

7. No further claims from the customer, especially for consequential losses not directly associated with the machine itself, will be considered.

Services are to be carried out on the machine according to the Service Plan for RC-750. Service plans for use in the workshop, where your services are performed, can be found at the back in this service book. Please ask the workshop to place stamps in the service book and in the service interval scheme below to help you to follow the intervals better.

Service parts for RC-750

Spare parts for 20 hours' service

Spare part number	Denomination	Quantity
22101004	Return filter transmission oil	1

Spare parts for 100 hours' service

Spare part number	Denomination	Quantity
22601010	Air filter iGX440.	1

Spare parts for 200 hours' service

Spare part number	Denomination	Quantity
22601010	Air filter iGX440.	1

Spare parts for 300 hours' service

Spare part number	Denomination	Quantity
15901023	Spark plug for iGX440	1
22601010	Air filter iGX440.	1
22101004	Return filter transmission oil	1

Spare parts for 400 hours' service

Spare part number	Denomination	Quantity
22601010	Air filter iGX440.	1

Spare parts for 500 hours' service

Spare part number	Denomination	Quantity
22601010	Air filter iGX440.	1

Spare parts for 600 hours' service

Spare part number	Denomination	Quantity
15901023	Spark plug for iGX440	1
22601010	Air filter iGX440.	1
22101004	Return filter transmission oil	1

Spare parts for 700 hours' service

Spare part number	Denomination	Quantity
22601010	Air filter iGX440.	1

Spare parts for 800 hours' service

Spare part number	Denomination	Quantity
22601010	Air filter iGX440.	1

Spare parts for 900 hours' service

Spare part number	Denomination	Quantity
15901023	Spark plug for iGX440	1
22601010	Air filter iGX440.	1
22101004	Return filter transmission oil	1

Spare parts for 1000 hours' service

Spare part number	Denomination	Quantity
22601010	Air filter iGX440.	1

20 hours' service Hour counter:_____ Date:_____ Signature and company stamp	100 hours' service Hour counter:_____ Date:_____ Signature and company stamp
200 hours' service Hour counter:_____ Date:_____ Signature and company stamp	300 hours' service Hour counter:_____ Date:_____ Signature and company stamp
400 hours' service Hour counter:_____ Date:_____ Signature and company stamp	500 hours' service Hour counter:_____ Date:_____ Signature and company stamp
600 hours' service Hour counter:_____ Date:_____ Signature and company stamp	700 hours' service Hour counter:_____ Date:_____ Signature and company stamp

800 hours' service Hour counter:_____ Date:_____ Signature and company stamp	900 hours' service Hour counter:_____ Date:_____ Signature and company stamp
1000 hours' service Hour counter:_____ Date:_____ Signature and company stamp	1100 hours' service Hour counter:_____ Date:_____ Signature and company stamp
1200 hours' service Hour counter:_____ Date:_____ Signature and company stamp	1300 hours' service Hour counter:_____ Date:_____ Signature and company stamp
1400 hours' service Hour counter:_____ Date:_____ Signature and company stamp	1500 hours' service Hour counter:_____ Date:_____ Signature and company stamp
1600 hours' service Hour counter:_____ Date:_____ Signature and company stamp	1700 hours' service Hour counter:_____ Date:_____ Signature and company stamp

1800 hours' service Hour counter:_____ Date:_____ Signature and company stamp	1900 hours' service Hour counter:_____ Date:_____ Signature and company stamp
2000 hours' service Hour counter:_____ Date:_____ Signature and company stamp	2100 hours' service Hour counter:_____ Date:_____ Signature and company stamp
2200 hours' service Hour counter:_____ Date:_____ Signature and company stamp	2300 hours' service Hour counter:_____ Date:_____ Signature and company stamp
2400 hours' service Hour counter:_____ Date:_____ Signature and company stamp	2500 hours' service Hour counter:_____ Date:_____ Signature and company stamp

Service Plan RC-750

10-02-2010 REV. 0

Date:	Machine number:	User:
Technician's sign.:	Engine number:	Machine type:
Customer's sign.:	Service hours:	Date of execution:
Operating hours of machine:		

Timan a/s
Fabriksvej 13
DK-6980 Tim
Denmark
Phone + 45 97 330 360
Fax +45 97 330 350

		Operating hours														
Pos:	Service	Daily	First month or 20 hours	Every 6 months or 100 hrs	Yearly or 300 hours	Every 2 years or 500 hrs	LUBRICATE	CONTROL	ADJUST	TIGHTEN UP	REPLACE	CLEAN	Service performed	Honda manual page	Timan manual page
	Petrol Motor iGX 440														
1	Motor oil [2]	X						X							23
2	Motor oil		X	X							X				38
3	Air filter	X										X		9	
4	Air filter			X							X			9	
5	Carburettor filter			X				X				X		10	
6	Spark plug			X				X	X					11	
7	Spark plug				X						X			11	
8	Spark catcher			X								X		11	
9	Valve play [1]			X				X	X						
10	Cam belt [1]					X		X	X			x			
11	Combustion chamber [1]					X						X			
12	Fuel tank [1]			X								X			
13	Fuel hoses [1]					X		X			X				
	Hydraulics														
14	Hydraulic pumps, density	X						X							
15	Hydraulic hose connections	X		X	X			X							
16	Hydraulic oil level	X						X							23
17	Hydraulic oil filter		X		X						X				38
18	Hydraulic olie					X					X				38
19	Cooler, hydraulic pump blade and grate	X										X			
	Transmission														
20	V-belts	X						X	X						39
21	Greasing as per lubricating plan	X	X	X	X		X								36
22	Tracks	X						X		X					43
23	Battery in remote control	X						X							20
24	Elektronics & safety equip. (emergency stop, steering, signal)	X						X							
25	Screws and bolts		X						X						45
26	Flails [3]	X						X							42
27	Flail bolts	X								X					42
28	Cleaning	X										X			45
29	Battery and cables		X	X				X							

[1] To be carried out by an authorized Timan dealer
[2] To be checked every 4 operating hours
[3] To be replaced if they are worn

Service Plan RC-750

10-02-2010 REV. 0

Date:	Machine number:	User:
Technician's sign.:	Engine number:	Machine type:
Customer's sign.:	Service hours:	Date of execution:
Operating hours of machine:		

Timan a/s
Fabriksvej 13
DK-6980 Tim
Denmark
Phone + 45 97 330 360
Fax +45 97 330 350

		Operating hours														
Pos:	Service	Daily	First month or 20 hours	Every 6 months or 100 hrs	Yearly or 300 hours	Every 2 years or 500 hrs	LUBRICATE	CONTROL	ADJUST	TIGHTEN UP	REPLACE	CLEAN	Service performed	Honda manual page	Timan manual page
	Petrol Motor iGX 440														
1	Motor oil [2]	X						X							23
2	Motor oil		X	X							X				38
3	Air filter	X										X		9	
4	Air filter			X							X			9	
5	Carburettor filter			X				X				X		10	
6	Spark plug			X				X	X					11	
7	Spark plug				X						X			11	
8	Spark catcher			X								X		11	
9	Valve play [1]			X				X	X						
10	Cam belt [1]					X		X	X			x			
11	Combustion chamber [1]					X						X			
12	Fuel tank [1]			X								X			
13	Fuel hoses [1]					X		X			X				
	Hydraulics														
14	Hydraulic pumps, density	X						X							
15	Hydraulic hose connections	X		X	X			X							
16	Hydraulic oil level	X						X							23
17	Hydraulic oil filter		X		X						X				38
18	Hydraulic olie					X					X				38
19	Cooler, hydraulic pump blade and grate	X										X			
	Transmission														
20	V-belts	X						X	X						39
21	Greasing as per lubricating plan	X	X	X	X		X								36
22	Tracks	X						X		X					43
23	Battery in remote control	X						X							20
24	Elektronics & safety equip. (emergency stop, steering, signal)	X						X							
25	Screws and bolts		X						X						45
26	Flails [3]	X						X							42
27	Flail bolts	X								X					42
28	Cleaning	X										X			45
29	Battery and cables		X	X				X							

[1] To be carried out by an authorized Timan dealer
[2] To be checked every 4 operating hours
[3] To be replaced if they are worn

Service Plan RC-750

10-02-2010 REV. 0

Date:	Machine number:	User:
Technician's sign.:	Engine number:	Machine type:
Customer's sign.:	Service hours:	Date of execution:
Operating hours of machine:		

Timan a/s
Fabriksvej 13
DK-6980 Tim
Denmark
Phone + 45 97 330 360
Fax +45 97 330 350

		Operating hours														
Pos:	Service	Daily	First month or 20 hours	Every 6 months or 100 hrs	Yearly or 300 hours	Every 2 years or 500 hrs	LUBRICATE	CONTROL	ADJUST	TIGHTEN UP	REPLACE	CLEAN	Service performed	Honda manual page	Timan manual page
	Petrol Motor iGX 440														
1	Motor oil [2]	X						X							23
2	Motor oil		X	X							X				38
3	Air filter	X										X		9	
4	Air filter			X							X			9	
5	Carburettor filter			X				X				X		10	
6	Spark plug			X				X	X					11	
7	Spark plug				X						X			11	
8	Spark catcher			X								X		11	
9	Valve play [1]			X				X	X						
10	Cam belt [1]					X		X	X			x			
11	Combustion chamber [1]					X						X			
12	Fuel tank [1]			X								X			
13	Fuel hoses [1]					X		X			X				
	Hydraulics														
14	Hydraulic pumps, density	X						X							
15	Hydraulic hose connections	X		X	X			X							
16	Hydraulic oil level	X						X							23
17	Hydraulic oil filter		X		X						X				38
18	Hydraulic olie					X					X				38
19	Cooler, hydraulic pump blade and grate	X										X			
	Transmission														
20	V-belts	X						X	X						39
21	Greasing as per lubricating plan	X	X	X	X		X								36
22	Tracks	X						X		X					43
23	Battery in remote control	X						X							20
24	Elektronics & safety equip. (emergency stop, steering, signal)	X						X							
25	Screws and bolts		X						X						45
26	Flails [3]	X						X							42
27	Flail bolts	X								X					42
28	Cleaning	X										X			45
29	Battery and cables		X	X				X							

[1] To be carried out by an authorized Timan dealer
[2] To be checked every 4 operating hours
[3] To be replaced if they are worn

Service Plan RC-750

10-02-2010 REV. 0

Date:	Machine number:	User:
Technician's sign.:	Engine number:	Machine type:
Customer's sign.:	Service hours:	Date of execution:
Operating hours of machine:		

Timan a/s
Fabriksvej 13
DK-6980 Tim
Denmark
Phone + 45 97 330 360
Fax +45 97 330 350

		Operating hours														
Pos:	Service	Daily	First month or 20 hours	Every 6 months or 100 hrs	Yearly or 300 hours	Every 2 years or 500 hrs	LUBRICATE	CONTROL	ADJUST	TIGHTEN UP	REPLACE	CLEAN	Service performed	Honda manual page	Timan manual page
	Petrol Motor iGX 440														
1	Motor oil [2]	X						X							23
2	Motor oil		X	X							X				38
3	Air filter	X										X		9	
4	Air filter			X							X			9	
5	Carburettor filter			X				X				X		10	
6	Spark plug			X				X	X					11	
7	Spark plug				X						X			11	
8	Spark catcher			X								X		11	
9	Valve play [1]			X				X	X						
10	Cam belt [1]					X		X	X			x			
11	Combustion chamber [1]					X						X			
12	Fuel tank [1]			X								X			
13	Fuel hoses [1]					X		X			X				
	Hydraulics														
14	Hydraulic pumps, density	X						X							
15	Hydraulic hose connections	X		X	X			X							
16	Hydraulic oil level	X						X							23
17	Hydraulic oil filter		X		X						X				38
18	Hydraulic olie					X					X				38
19	Cooler, hydraulic pump blade and grate	X										X			
	Transmission														
20	V-belts	X						X	X						39
21	Greasing as per lubricating plan	X	X	X	X		X								36
22	Tracks	X						X		X					43
23	Battery in remote control	X						X							20
24	Elektronics & safety equip. (emergency stop, steering, signal)	X						X							
25	Screws and bolts		X						X						45
26	Flails [3]	X						X							42
27	Flail bolts	X								X					42
28	Cleaning	X										X			45
29	Battery and cables		X	X				X							

[1] To be carried out by an authorized Timan dealer
[2] To be checked every 4 operating hours
[3] To be replaced if they are worn

Service Plan RC-750

10-02-2010 REV. 0

Date:	Machine number:	User:
Technician's sign.:	Engine number:	Machine type:
Customer's sign.:	Service hours:	Date of execution:
Operating hours of machine:		

Timan a/s
Fabriksvej 13
DK-6980 Tim
Denmark
Phone + 45 97 330 360
Fax +45 97 330 350

		Operating hours														
Pos:	Service	Daily	First month or 20 hours	Every 6 months or 100 hrs	Yearly or 300 hours	Every 2 years or 500 hrs	LUBRICATE	CONTROL	ADJUST	TIGHTEN UP	REPLACE	CLEAN	Service performed	Honda manual page	Timan manual page
	Petrol Motor iGX 440														
1	Motor oil [2]	X						X							23
2	Motor oil		X	X							X				38
3	Air filter	X										X		9	
4	Air filter			X							X			9	
5	Carburettor filter			X				X				X		10	
6	Spark plug			X				X	X					11	
7	Spark plug				X						X			11	
8	Spark catcher			X								X		11	
9	Valve play [1]			X				X	X						
10	Cam belt [1]					X		X	X			x			
11	Combustion chamber [1]					X						X			
12	Fuel tank [1]			X								X			
13	Fuel hoses [1]					X		X			X				
	Hydraulics														
14	Hydraulic pumps, density	X						X							
15	Hydraulic hose connections	X		X	X			X							
16	Hydraulic oil level	X						X							23
17	Hydraulic oil filter		X		X						X				38
18	Hydraulic olie					X					X				38
19	Cooler, hydraulic pump blade and grate	X										X			
	Transmission														
20	V-belts	X						X	X						39
21	Greasing as per lubricating plan	X	X	X	X		X								36
22	Tracks	X						X		X					43
23	Battery in remote control	X						X							20
24	Elektronics & safety equip. (emergency stop, steering, signal)	X						X							
25	Screws and bolts		X						X						45
26	Flails [3]	X						X							42
27	Flail bolts	X								X					42
28	Cleaning	X										X			45
29	Battery and cables		X	X				X							

[1] To be carried out by an authorized Timan dealer
[2] To be checked every 4 operating hours
[3] To be replaced if they are worn

Service Plan RC-750

10-02-2010 REV. 0

Date:	Machine number:	User:
Technician's sign.:	Engine number:	Machine type:
Customer's sign.:	Service hours:	Date of execution:
Operating hours of machine:		

Timan a/s
Fabriksvej 13
DK-6980 Tim
Denmark
Phone + 45 97 330 360
Fax +45 97 330 350

		Operating hours														
Pos:	Service	Daily	First month or 20 hours	Every 6 months or 100 hrs	Yearly or 300 hours	Every 2 years or 500 hrs	LUBRICATE	CONTROL	ADJUST	TIGHTEN UP	REPLACE	CLEAN	Service performed	Honda manual page	Timan manual page
	Petrol Motor iGX 440														
1	Motor oil [2]	X						X							23
2	Motor oil		X	X							X				38
3	Air filter	X										X		9	
4	Air filter			X							X			9	
5	Carburettor filter			X				X				X		10	
6	Spark plug			X				X	X					11	
7	Spark plug				X						X			11	
8	Spark catcher			X								X		11	
9	Valve play [1]			X				X	X						
10	Cam belt [1]					X		X	X			x			
11	Combustion chamber [1]					X						X			
12	Fuel tank [1]			X								X			
13	Fuel hoses [1]					X		X			X				
	Hydraulics														
14	Hydraulic pumps, density	X						X							
15	Hydraulic hose connections	X		X	X			X							
16	Hydraulic oil level	X						X							23
17	Hydraulic oil filter		X		X						X				38
18	Hydraulic olie					X					X				38
19	Cooler, hydraulic pump blade and grate	X										X			
	Transmission														
20	V-belts	X						X	X						39
21	Greasing as per lubricating plan	X	X	X	X		X								36
22	Tracks	X						X		X					43
23	Battery in remote control	X						X							20
24	Elektronics & safety equip. (emergency stop, steering, signal)	X						X							
25	Screws and bolts		X						X						45
26	Flails [3]	X						X							42
27	Flail bolts	X								X					42
28	Cleaning	X										X			45
29	Battery and cables		X	X				X							

[1] To be carried out by an authorized Timan dealer
[2] To be checked every 4 operating hours
[3] To be replaced if they are worn

Service Plan RC-750

10-02-2010 REV. 0

Date:	Machine number:	User:
Technician's sign.:	Engine number:	Machine type:
Customer's sign.:	Service hours:	Date of execution:
Operating hours of machine:		

Timan a/s
Fabriksvej 13
DK-6980 Tim
Denmark
Phone + 45 97 330 360
Fax +45 97 330 350

		Operating hours														
Pos:	Service	Daily	First month or 20 hours	Every 6 months or 100 hrs	Yearly or 300 hours	Every 2 years or 500 hrs	LUBRICATE	CONTROL	ADJUST	TIGHTEN UP	REPLACE	CLEAN	Service performed	Honda manual page	Timan manual page
	Petrol Motor iGX 440														
1	Motor oil [2]	X						X							23
2	Motor oil		X	X							X				38
3	Air filter	X										X		9	
4	Air filter			X							X			9	
5	Carburettor filter			X				X				X		10	
6	Spark plug			X				X	X					11	
7	Spark plug				X						X			11	
8	Spark catcher			X								X		11	
9	Valve play [1]			X				X	X						
10	Cam belt [1]					X		X	X			x			
11	Combustion chamber [1]					X						X			
12	Fuel tank [1]			X								X			
13	Fuel hoses [1]					X		X			X				
	Hydraulics														
14	Hydraulic pumps, density	X						X							
15	Hydraulic hose connections	X		X	X			X							
16	Hydraulic oil level	X						X							23
17	Hydraulic oil filter		X		X						X				38
18	Hydraulic olie					X					X				38
19	Cooler, hydraulic pump blade and grate	X										X			
	Transmission														
20	V-belts	X						X	X						39
21	Greasing as per lubricating plan	X	X	X	X		X								36
22	Tracks	X						X		X					43
23	Battery in remote control	X						X							20
24	Elektronics & safety equip. (emergency stop, steering, signal)	X						X							
25	Screws and bolts		X						X						45
26	Flails [3]	X						X							42
27	Flail bolts	X								X					42
28	Cleaning	X										X			45
29	Battery and cables		X	X				X							

[1] To be carried out by an authorized Timan dealer
[2] To be checked every 4 operating hours
[3] To be replaced if they are worn

Service Plan RC-750

10-02-2010 REV. 0

Date:	Machine number:	User:
Technician's sign.:	Engine number:	Machine type:
Customer's sign.:	Service hours:	Date of execution:
Operating hours of machine:		

Timan a/s
Fabriksvej 13
DK-6980 Tim
Denmark
Phone + 45 97 330 360
Fax +45 97 330 350

		Operating hours														
Pos:	Service	Daily	First month or 20 hours	Every 6 months or 100 hrs	Yearly or 300 hours	Every 2 years or 500 hrs	LUBRICATE	CONTROL	ADJUST	TIGHTEN UP	REPLACE	CLEAN	Service performed	Honda manual page	Timan manual page
	Petrol Motor iGX 440														
1	Motor oil [2]	X						X							23
2	Motor oil		X	X							X				38
3	Air filter	X										X		9	
4	Air filter			X							X			9	
5	Carburettor filter			X				X				X		10	
6	Spark plug			X				X	X					11	
7	Spark plug				X						X			11	
8	Spark catcher			X								X		11	
9	Valve play [1]			X				X	X						
10	Cam belt [1]					X		X	X			x			
11	Combustion chamber [1]					X						X			
12	Fuel tank [1]			X								X			
13	Fuel hoses [1]					X		X			X				
	Hydraulics														
14	Hydraulic pumps, density	X						X							
15	Hydraulic hose connections	X		X	X			X							
16	Hydraulic oil level	X						X							23
17	Hydraulic oil filter		X		X						X				38
18	Hydraulic olie					X					X				38
19	Cooler, hydraulic pump blade and grate	X										X			
	Transmission														
20	V-belts	X						X	X						39
21	Greasing as per lubricating plan	X	X	X	X		X								36
22	Tracks	X						X		X					43
23	Battery in remote control	X						X							20
24	Elektronics & safety equip. (emergency stop, steering, signal)	X						X							
25	Screws and bolts		X						X						45
26	Flails [3]	X						X							42
27	Flail bolts	X								X					42
28	Cleaning	X										X			45
29	Battery and cables		X	X				X							

[1] To be carried out by an authorized Timan dealer
[2] To be checked every 4 operating hours
[3] To be replaced if they are worn

Service Plan RC-750

10-02-2010 REV. 0

Date:	Machine number:	User:
Technician's sign.:	Engine number:	Machine type:
Customer's sign.:	Service hours:	Date of execution:
Operating hours of machine:		

Timan a/s
Fabriksvej 13
DK-6980 Tim
Denmark
Phone + 45 97 330 360
Fax +45 97 330 350

		Operating hours														
Pos:	Service	Daily	First month or 20 hours	Every 6 months or 100 hrs	Yearly or 300 hours	Every 2 years or 500 hrs	LUBRICATE	CONTROL	ADJUST	TIGHTEN UP	REPLACE	CLEAN	Service performed	Honda manual page	Timan manual page
	Petrol Motor iGX 440														
1	Motor oil [2]	X						X							23
2	Motor oil		X	X							X				38
3	Air filter	X										X		9	
4	Air filter			X							X			9	
5	Carburettor filter			X				X				X		10	
6	Spark plug			X				X	X					11	
7	Spark plug				X						X			11	
8	Spark catcher			X								X		11	
9	Valve play [1]			X				X	X						
10	Cam belt [1]					X		X	X			x			
11	Combustion chamber [1]					X						X			
12	Fuel tank [1]			X								X			
13	Fuel hoses [1]					X		X			X				
	Hydraulics														
14	Hydraulic pumps, density	X						X							
15	Hydraulic hose connections	X		X	X			X							
16	Hydraulic oil level	X						X							23
17	Hydraulic oil filter		X		X						X				38
18	Hydraulic olie					X					X				38
19	Cooler, hydraulic pump blade and grate	X										X			
	Transmission														
20	V-belts	X						X	X						39
21	Greasing as per lubricating plan	X	X	X	X		X								36
22	Tracks	X						X		X					43
23	Battery in remote control	X						X							20
24	Elektronics & safety equip. (emergency stop, steering, signal)	X						X							
25	Screws and bolts		X						X						45
26	Flails [3]	X						X							42
27	Flail bolts	X								X					42
28	Cleaning	X										X			45
29	Battery and cables		X	X				X							

[1] To be carried out by an authorized Timan dealer
[2] To be checked every 4 operating hours
[3] To be replaced if they are worn

Service Plan RC-750

10-02-2010 REV. 0

Date:	Machine number:	User:
Technician's sign.:	Engine number:	Machine type:
Customer's sign.:	Service hours:	Date of execution:
Operating hours of machine:		

Timan a/s
Fabriksvej 13
DK-6980 Tim
Denmark
Phone + 45 97 330 360
Fax +45 97 330 350

		Operating hours														
Pos:	Service	Daily	First month or 20 hours	Every 6 months or 100 hrs	Yearly or 300 hours	Every 2 years or 500 hrs	LUBRICATE	CONTROL	ADJUST	TIGHTEN UP	REPLACE	CLEAN	Service performed	Honda manual page	Timan manual page
	Petrol Motor iGX 440														
1	Motor oil [2]	X						X							23
2	Motor oil		X	X							X				38
3	Air filter	X										X		9	
4	Air filter			X							X			9	
5	Carburettor filter			X				X				X		10	
6	Spark plug			X				X	X					11	
7	Spark plug				X						X			11	
8	Spark catcher			X								X		11	
9	Valve play [1]			X				X	X						
10	Cam belt [1]					X		X	X			x			
11	Combustion chamber [1]					X						X			
12	Fuel tank [1]			X								X			
13	Fuel hoses [1]					X		X			X				
	Hydraulics														
14	Hydraulic pumps, density	X						X							
15	Hydraulic hose connections	X		X	X			X							
16	Hydraulic oil level	X						X							23
17	Hydraulic oil filter		X		X						X				38
18	Hydraulic olie					X					X				38
19	Cooler, hydraulic pump blade and grate	X										X			
	Transmission														
20	V-belts	X						X	X						39
21	Greasing as per lubricating plan	X	X	X	X		X								36
22	Tracks	X						X		X					43
23	Battery in remote control	X						X							20
24	Elektronics & safety equip. (emergency stop, steering, signal)	X						X							
25	Screws and bolts		X						X						45
26	Flails [3]	X						X							42
27	Flail bolts	X								X					42
28	Cleaning	X										X			45
29	Battery and cables		X	X				X							

[1] To be carried out by an authorized Timan dealer
[2] To be checked every 4 operating hours
[3] To be replaced if they are worn

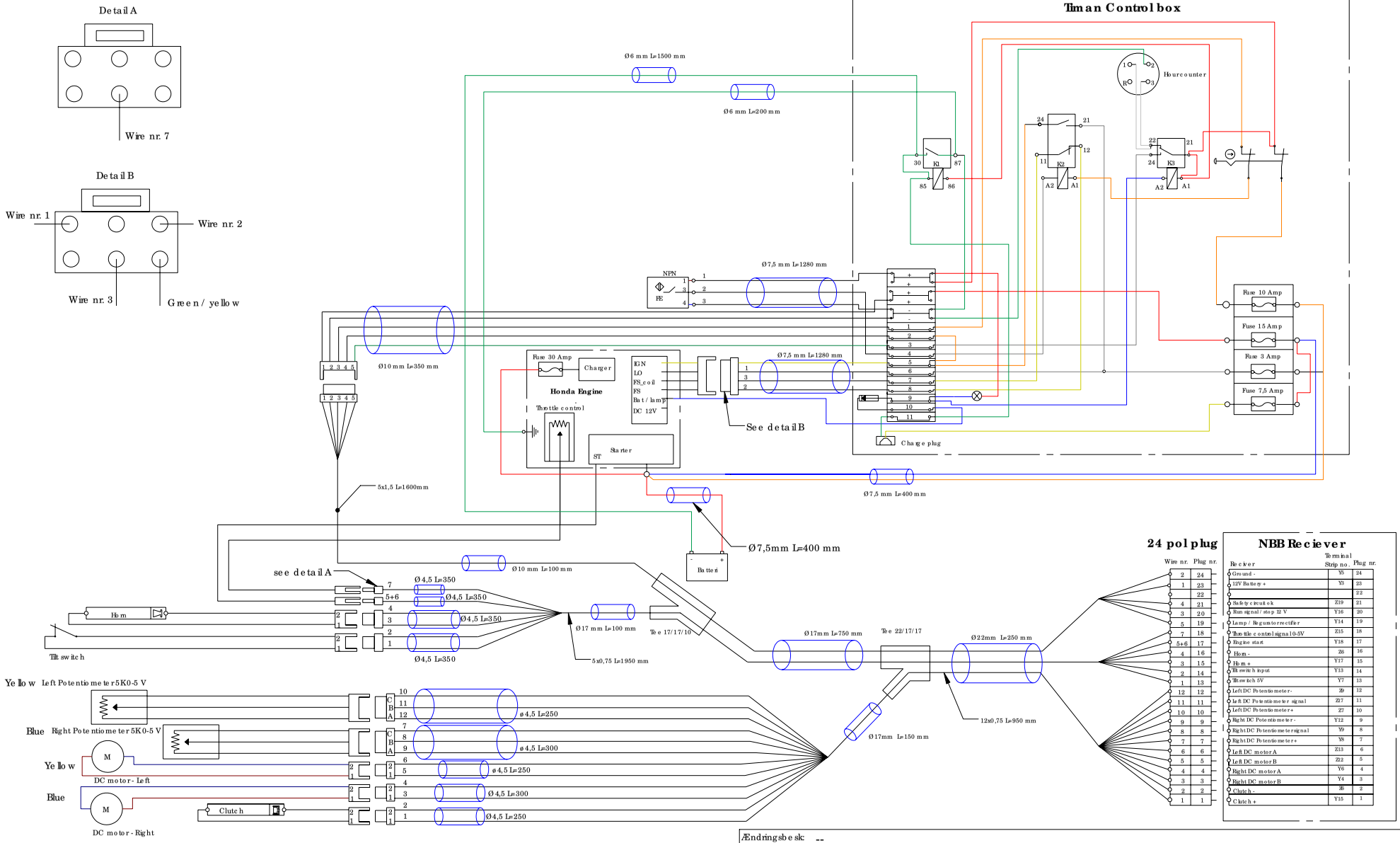

Ændringsbesk: --			
Materiale:		Generel tol:	DS/ISO 2768 m/K
Overflade beh.:		Svejsekval:	DS 316 Sø mkl. A
Mål: 1:1	EJENDOMSRET OG FORTROLIGHED INFORMATION INDEHOLDT PÅ DENNE TEGNING TILHØRER ALENE TIMAN A/S. REPRODUKTION I DELE ELLER SOM KOPI UDEN SKRIFTLIG TILLADELSE FRA TIMAN A/S FORBYDES.	Tegn. dato: 150110	Sign.: VN	Ktrl.: --
Format: A3	Side: 1/1	Rev. dato: --	Sign.: --	Ktrl.: --
Skalerikke tegningen	Vægt: gram	Udskrevet d.	19-10-2010	
Emne: El Diagram		Tegn. nr.:	- 04	

TIMAN
Fabriksvej 13, DK-6980 Tim
Tel: +45 97 330 360
Fax: +45 97 330 350
E-mail: timan@timan.dk

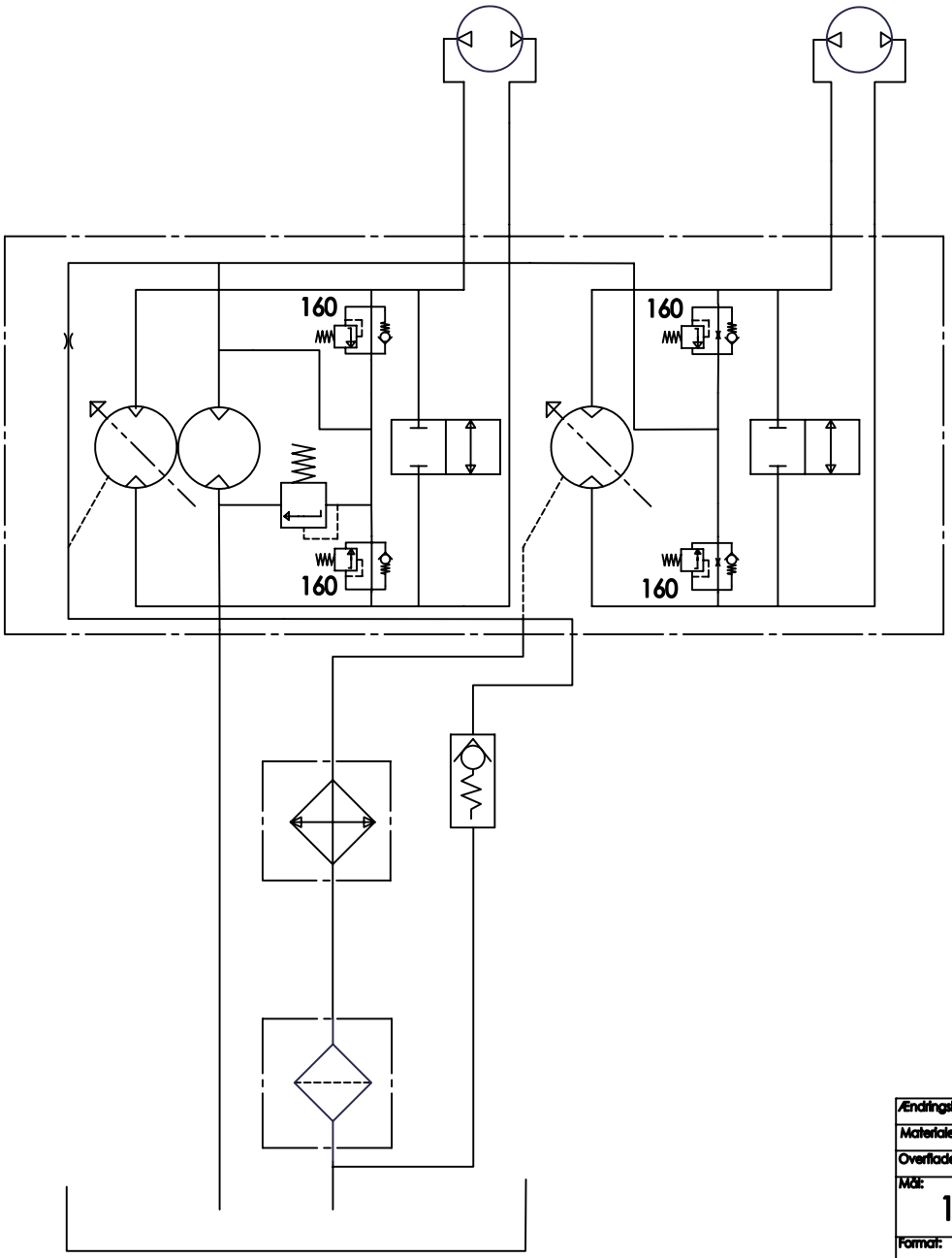

Ændringsbesk: –				
Materiale:			Generel tol.:	DS/ISO 2768 m/K
Overfladebeh.:			Svejsekval.:	DS 316 Sømkl. A
Mål: 1:1	EJENDOMSRET OG FORTROLIGHED INFORMATION INDEHOLDT PÅ DENNE TEGNING TILHØRER ALENE TIMAN A/S. REPRODUKTION I DELE ELLER SOM KOPI UDEN SKRIFTLIG TILLADELSE FRA TIMAN A/S FORBYDES.	TIMAN Fabriksvej 13, DK-6980 Tim Tel: +45 97 330 360 Fax: +45 97 330 350 E-mail: timan@timan.dk	Tegn. dato: 030310	Sign.: VN / Rev. dato: – / Sign.:	Kirl.: – / Kirl.: –
Format: A3 / Side: 1/1				
Skaler ikke tegningen	Vægt: gram		Udskrevet d.	04-03-2010
Emne: Hydraulikdiagram RC-750			Tegn. nr.:	-

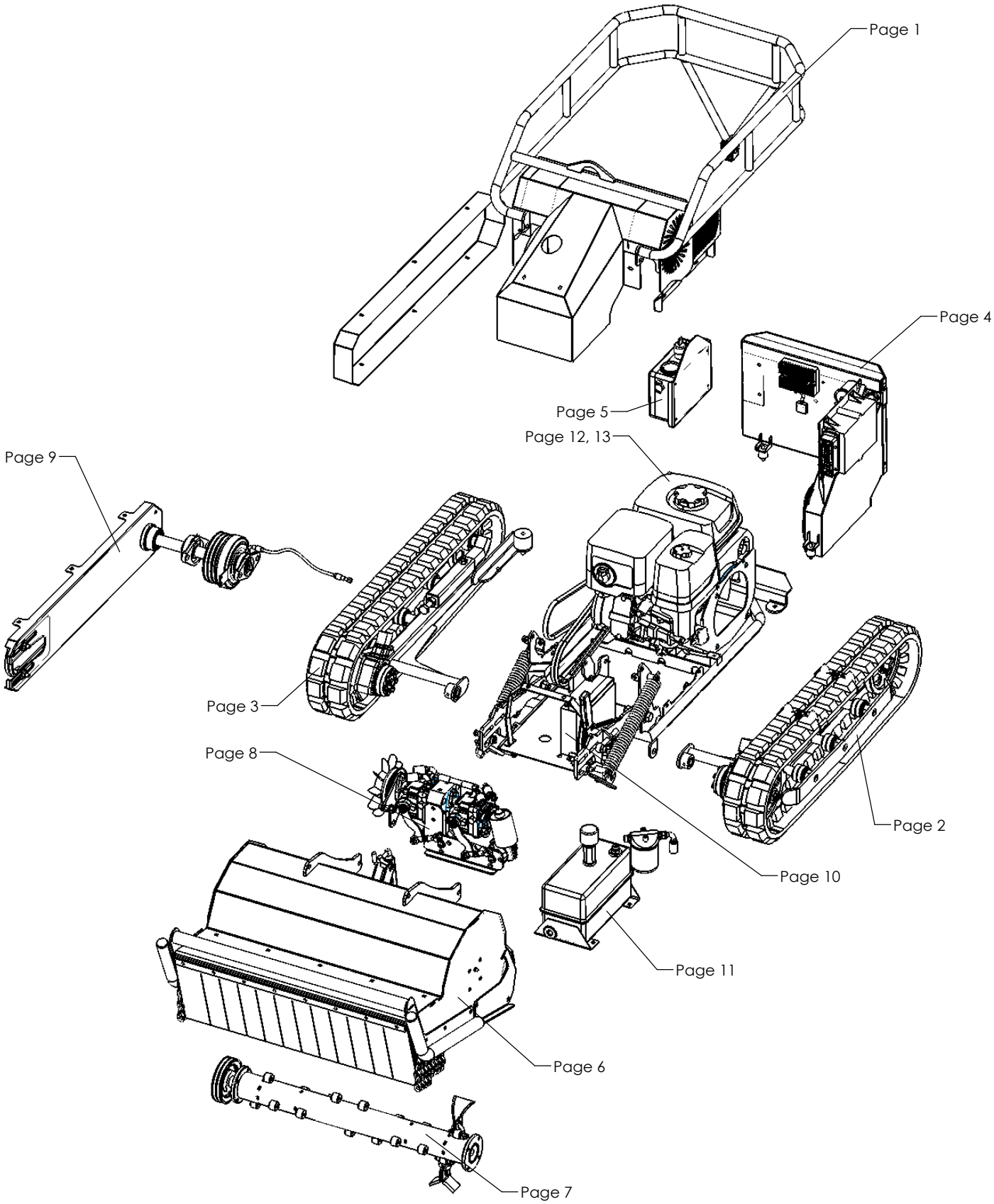
Page 1
Page 4
Page 5
Page 12, 13
Page 9
Page 3
Page 8
Page 2
Page 10
Page 11
Page 6
Page 7

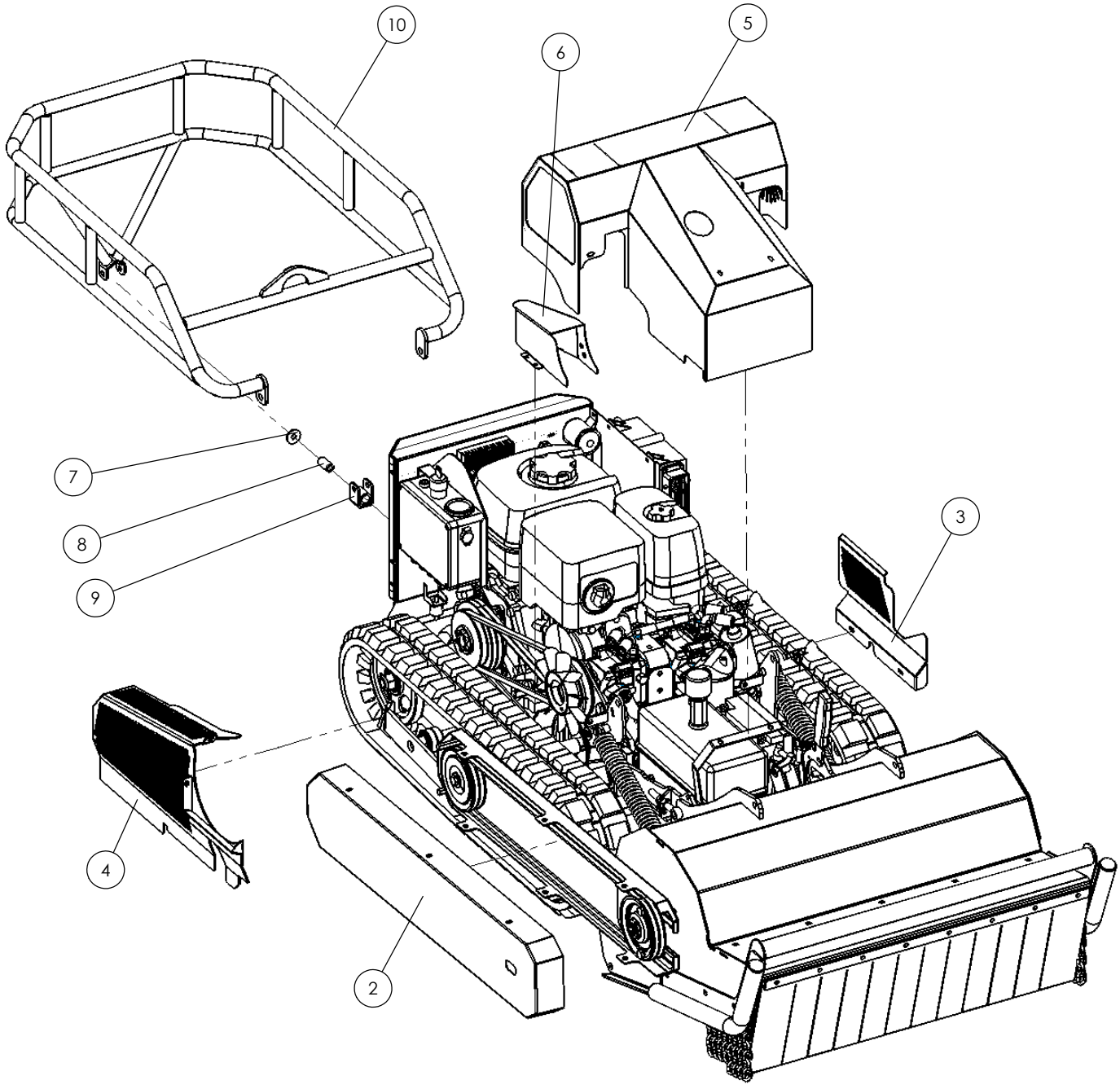

POS. NR.	VARENR.
2	410715
3	410646
4	410717
5	410719
6	410510
7	40101005
8	410564
9	410721
10	410723

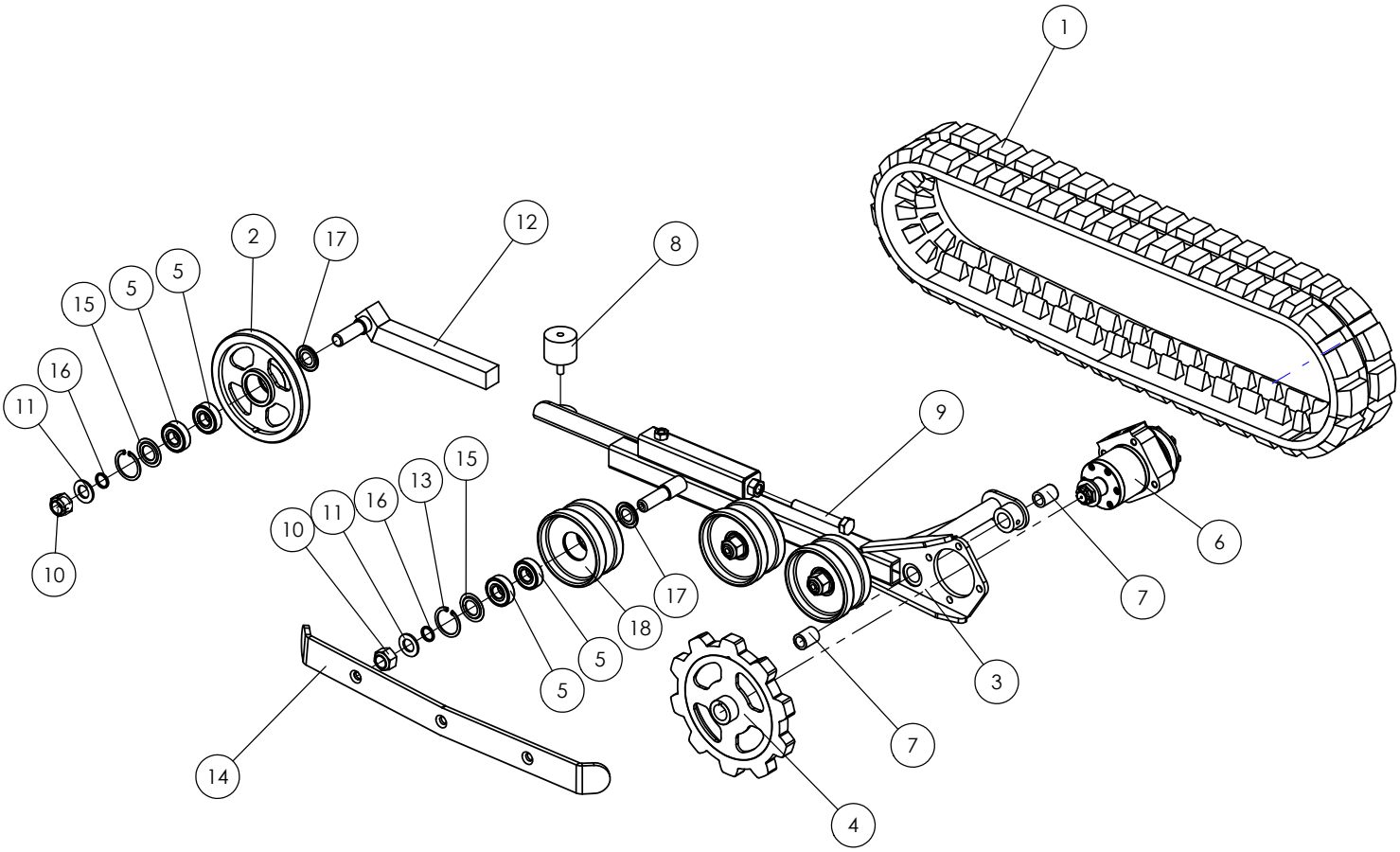

POS. NR.	VARENR.
1	16501000
2	410159
3	410322
4	410255
5	34301002
6	24301003
7	410177
8	31301006
9	39101029
10	38201009
11	40201007
12	410500
13	41201000
14	410328
15	37451001
16	410605
17	37451000
18	410493

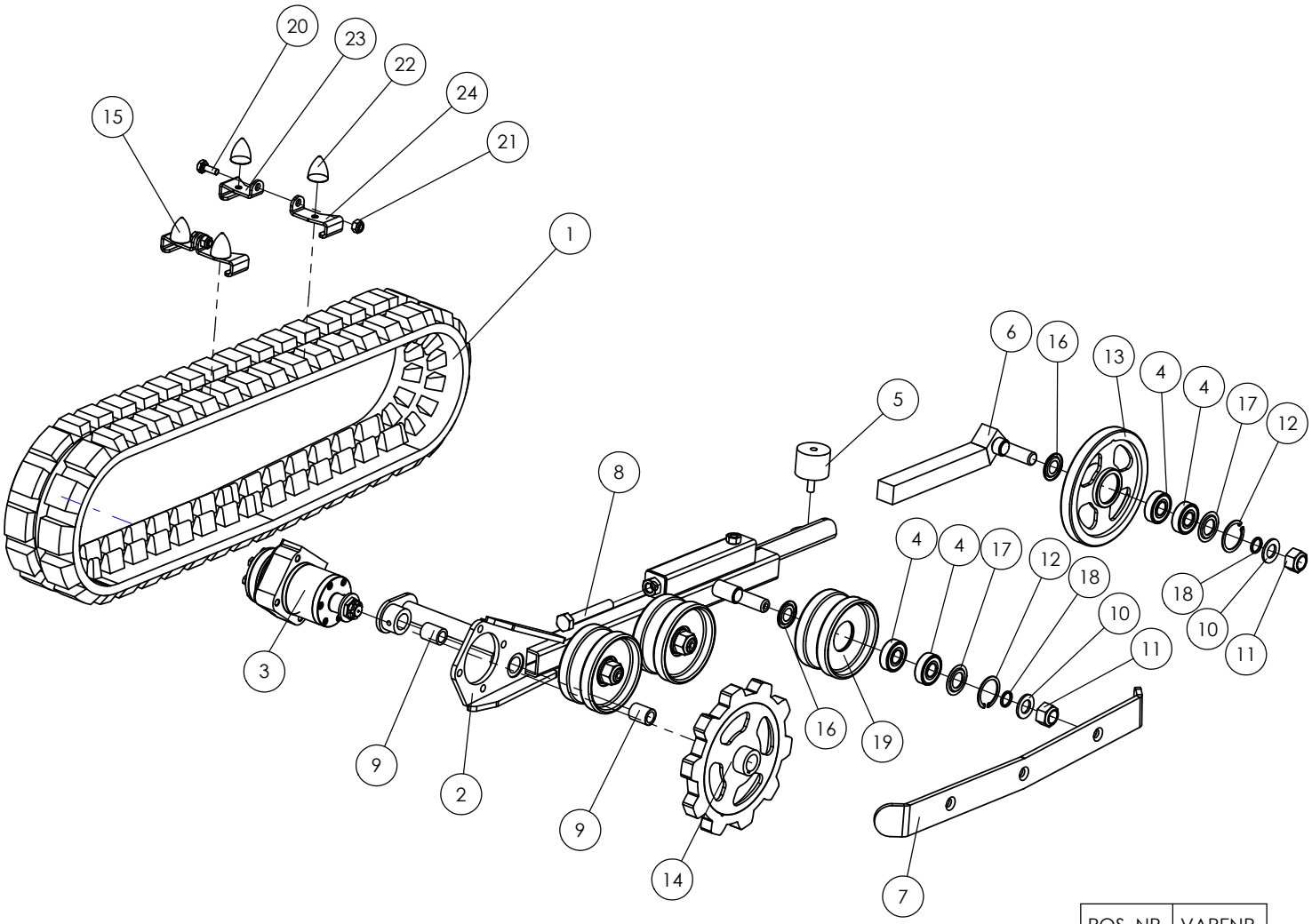

POS. NR.	VARENR.
1	16501000
2	410314
3	24301003
4	34301002
5	31301006
6	410325
7	410328
8	39101029
9	410177
10	40201007
11	38201009
12	41201000
13	410159
14	410255
15	410108
16	37451000
17	37451001
18	410605
19	410493
20	39101030
21	38201004
22	31301008
23	410580
24	410579

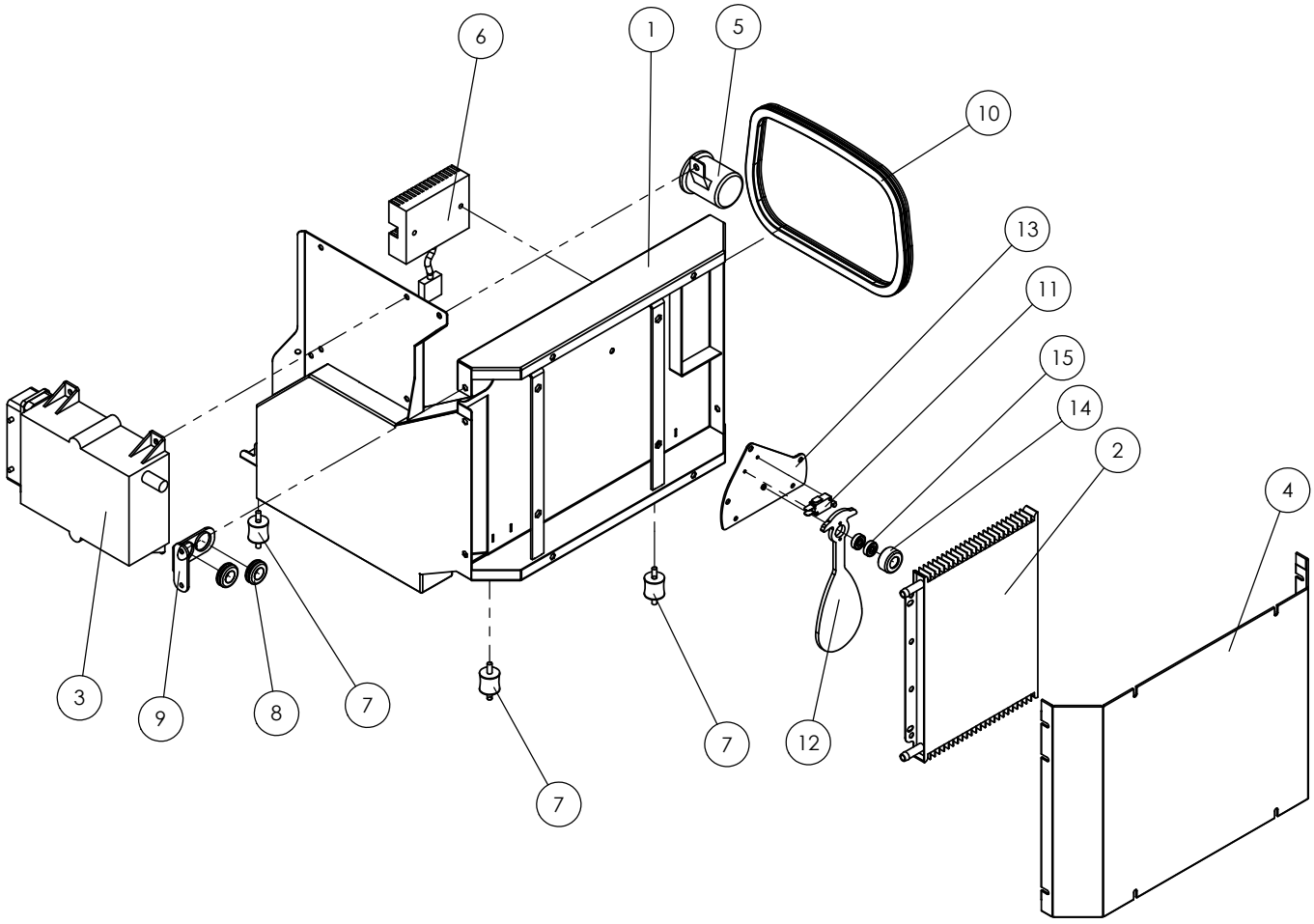

POS. NR.	VARENR.
1	410634
2	18301000
3	410452
4	410520
5	43801011
6	15901028
7	31301007
8	37111001
9	410644
10	410701
11	43101012
12	410516
13	410568
14	410668
15	34301010

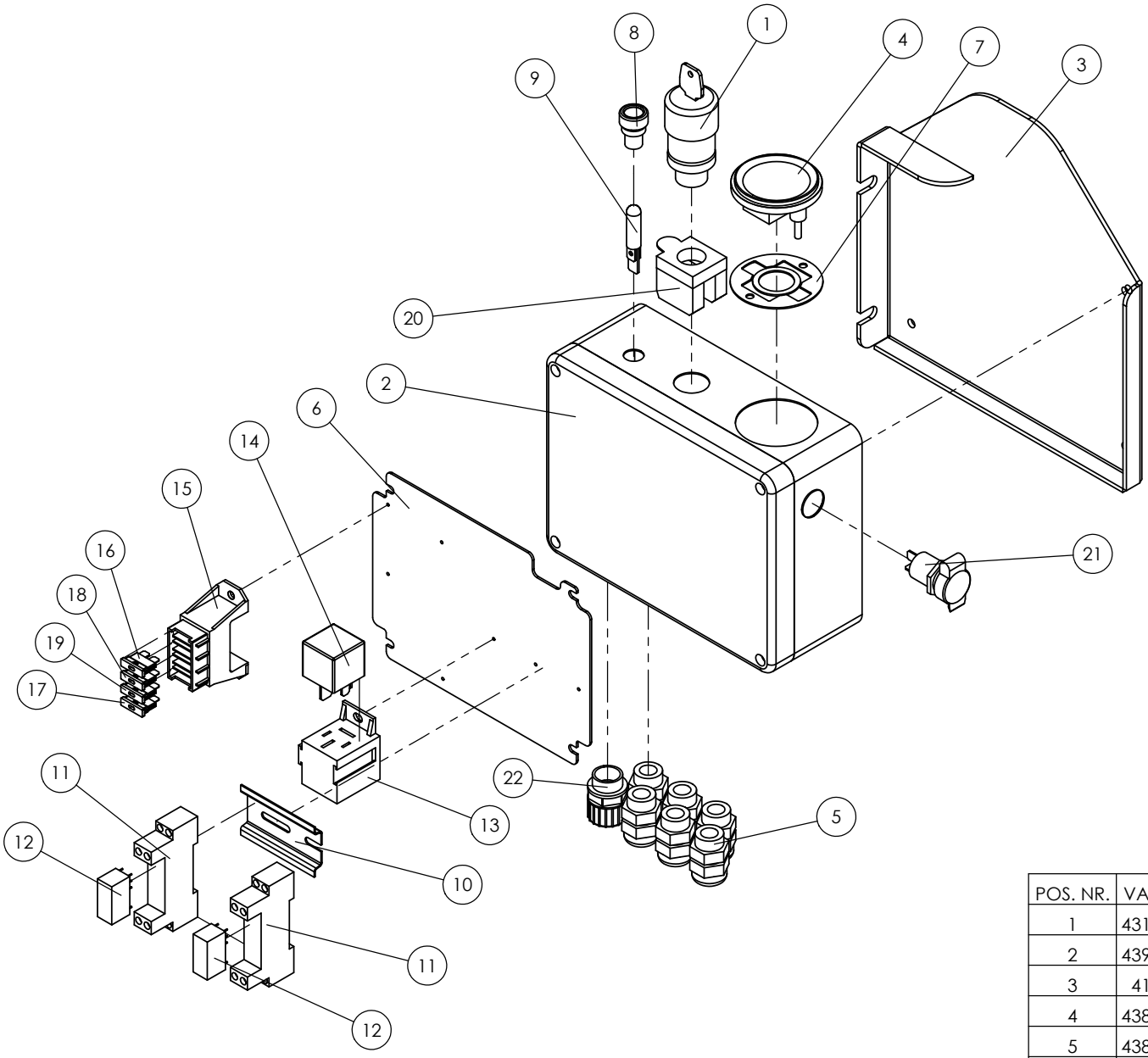

POS. NR.	VARENR.
1	43131000
2	43931000
3	410518
4	43801013
5	43801012
6	410546
7	410602
8	43401012
9	43401001
10	410702
11	43911002
12	43901003
13	43911001
14	43901002
15	43201002
16	43211003
17	43211004
18	43211005
19	43211007
20	43131001
21	43801015
22	43801021

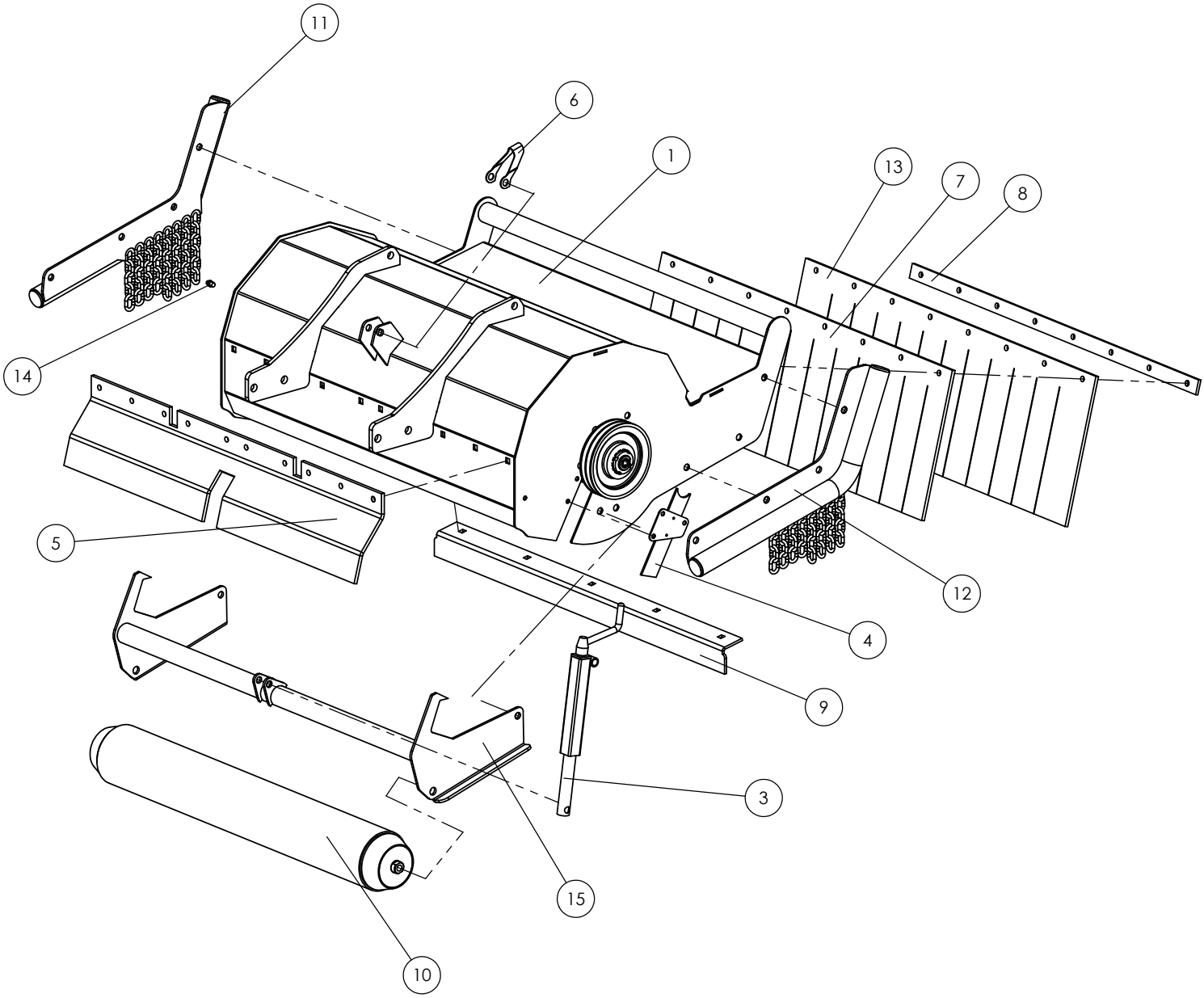

POS. NR.	VARENR.
1	410705
2	410618
3	410347
4	410662
5	410547
6	410581
7	410647
8	410549
9	410652
10	410657
11	410709
12	410708
13	410687
14	32201000
15	410711

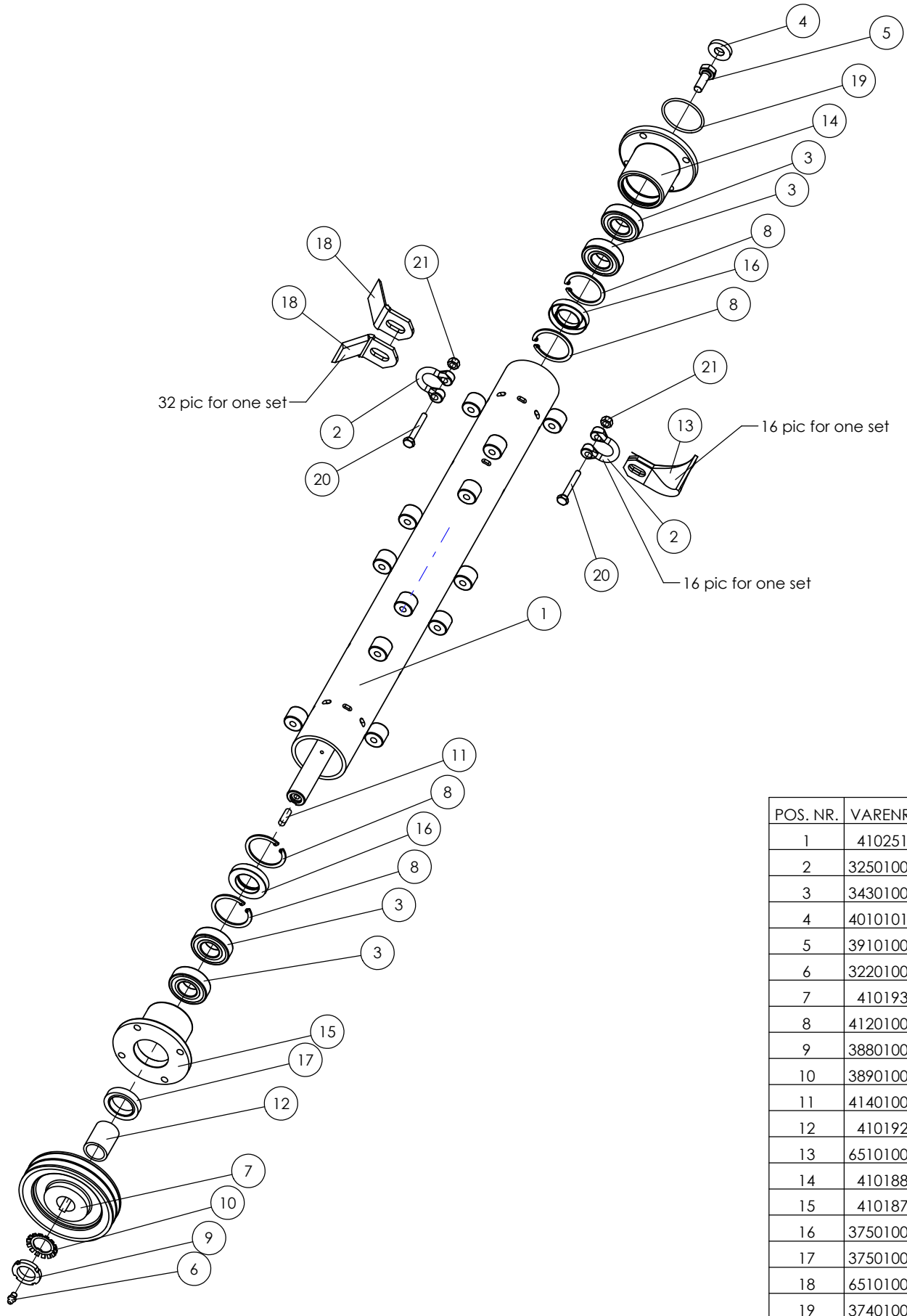

POS. NR.	VARENR.
1	410251
2	32501000
3	34301003
4	40101010
5	39101009
6	32201000
7	410193
8	41201001
9	38801001
10	38901001
11	41401002
12	410192
13	65101000
14	410188
15	410187
16	37501002
17	37501000
18	65101001
19	37401001
20	39201017
21	38201003

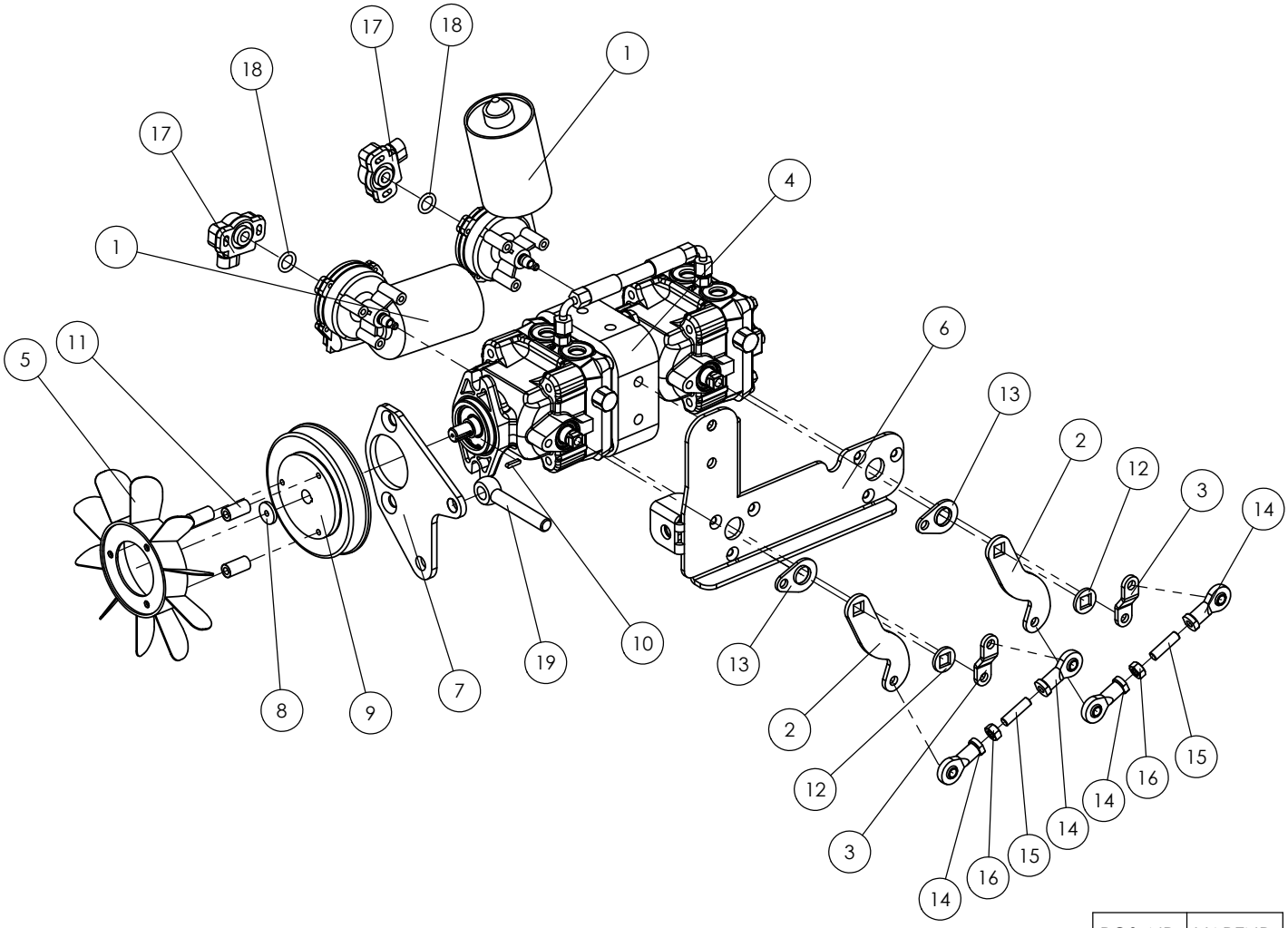

POS. NR.	VARENR.
1	410110
2	410691
3	410446
4	23101003
5	52701001
6	410284
7	410282
8	410461
9	410503
10	41401005
11	410544
12	410545
13	410645
14	33201008
15	39401002
16	38301003
17	27401001
18	51601006
19	39601005

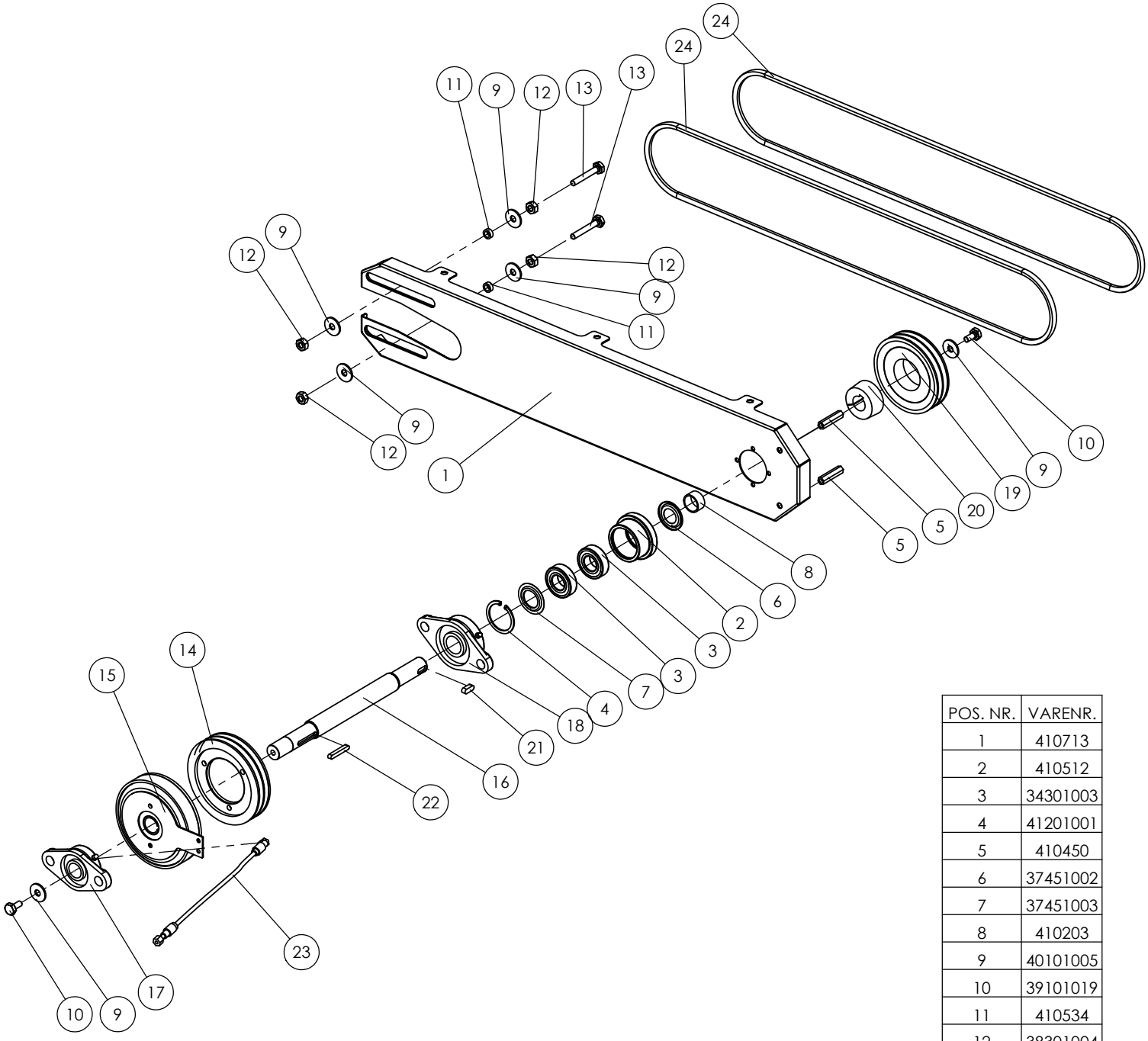

POS. NR.	VARENR.
1	410713
2	410512
3	34301003
4	41201001
5	410450
6	37451002
7	37451003
8	410203
9	40101005
10	39101019
11	410534
12	38301004
13	39201019
14	410291
15	49101002
16	410272
17	34701000
18	34701001
19	52701002
20	52601000
21	41401003
22	41401004
23	410107
24	52101002

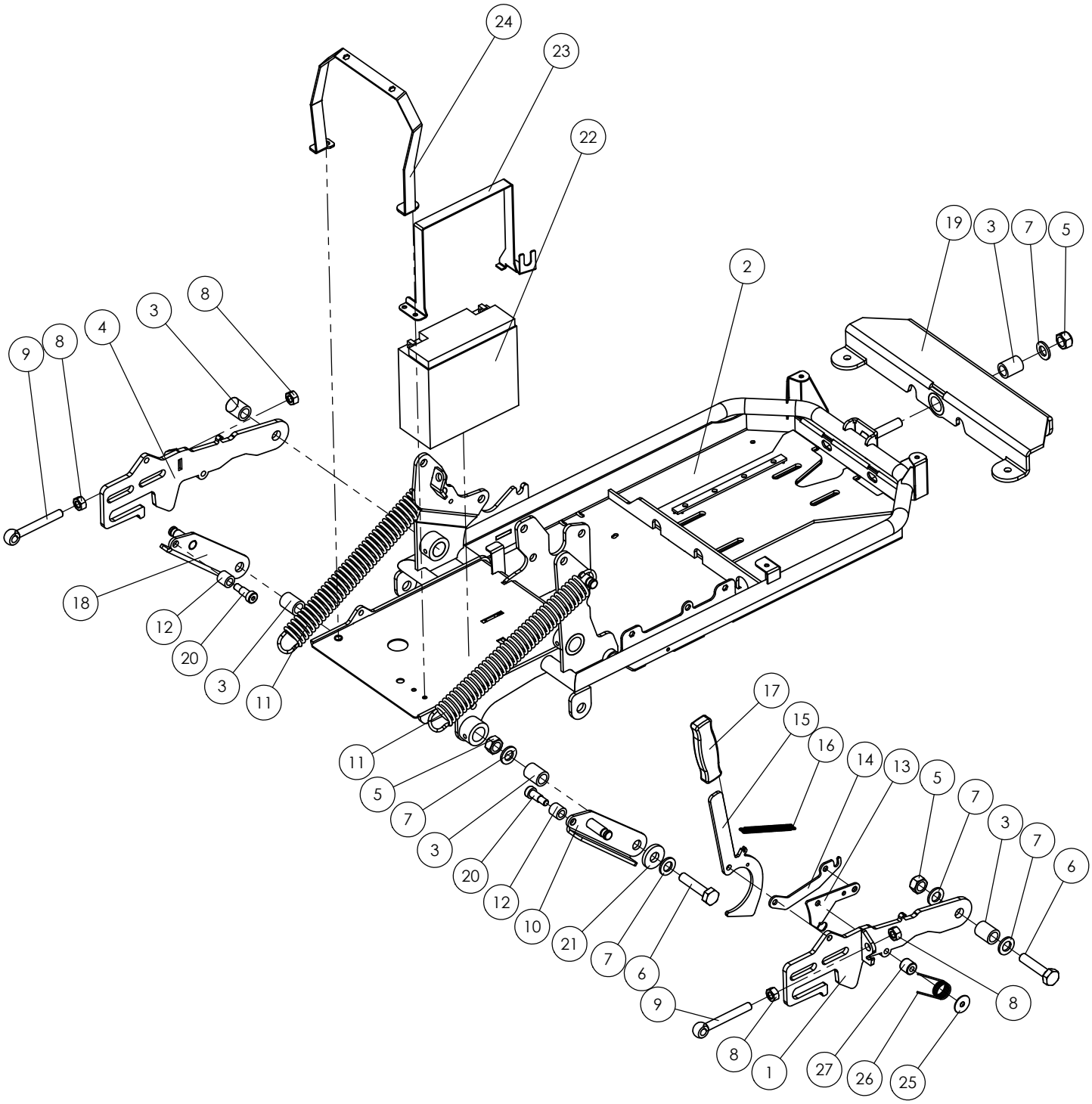

POS. NR.	VARENR.	POS. NR.	VARENR.	POS. NR.	VARENR.
1	410269	10	410340	19	410353
2	410261	11	31201002	20	39601004
3	410177	12	410337	21	40101012
4	410271	13	410664	22	19101003
5	38201007	14	410339	23	410626
6	39201014	15	410440	24	410629
7	40201006	16	31201000	25	40101013
8	38301005	17	42401010	26	31401000
9	39601003	18	410341	27	410665

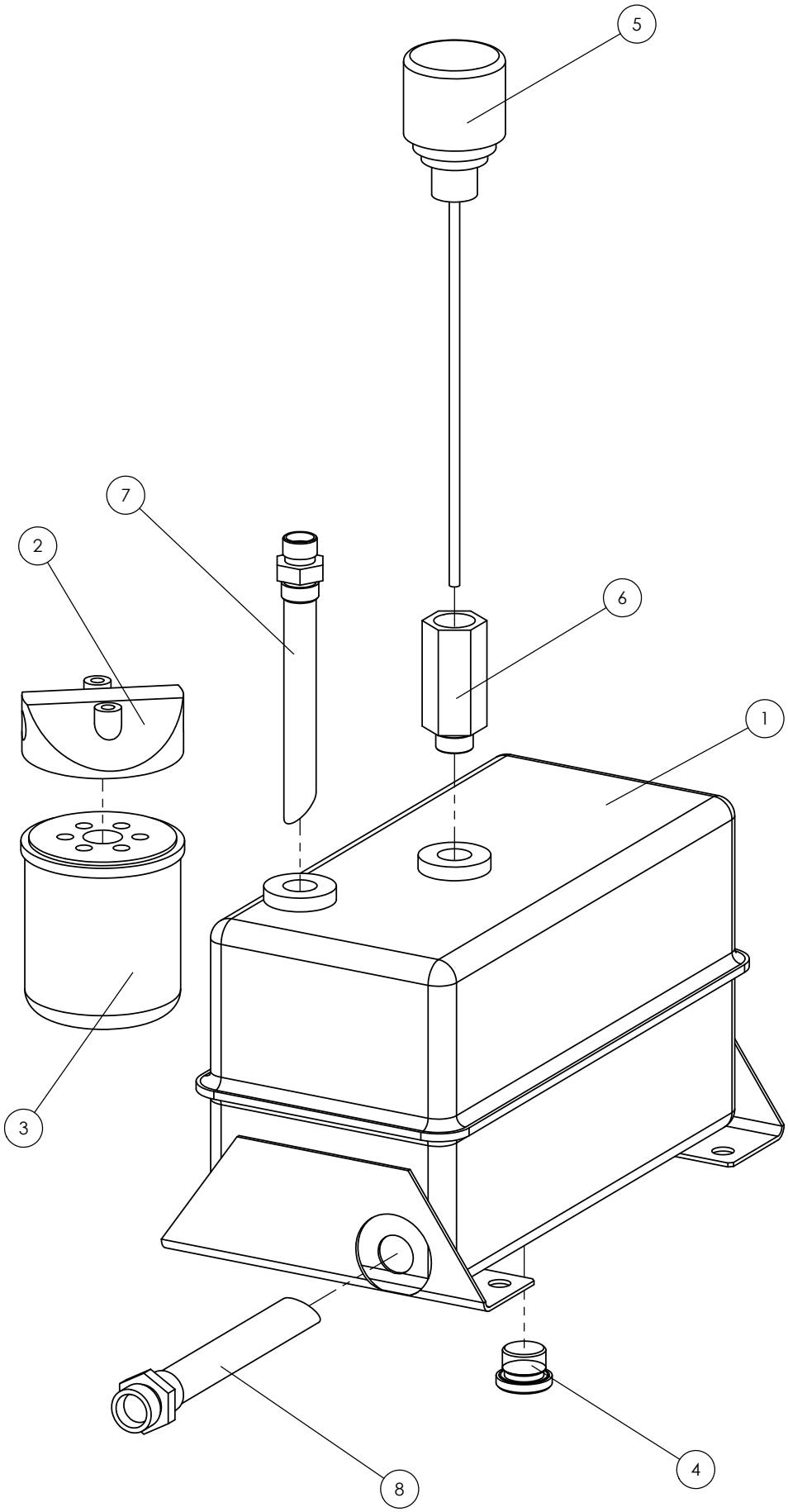

POS. NR.	VARENR.
1	22701000
2	22101003
3	22101004
4	25421008
5	22501006
6	410692
7	410693
8	410695

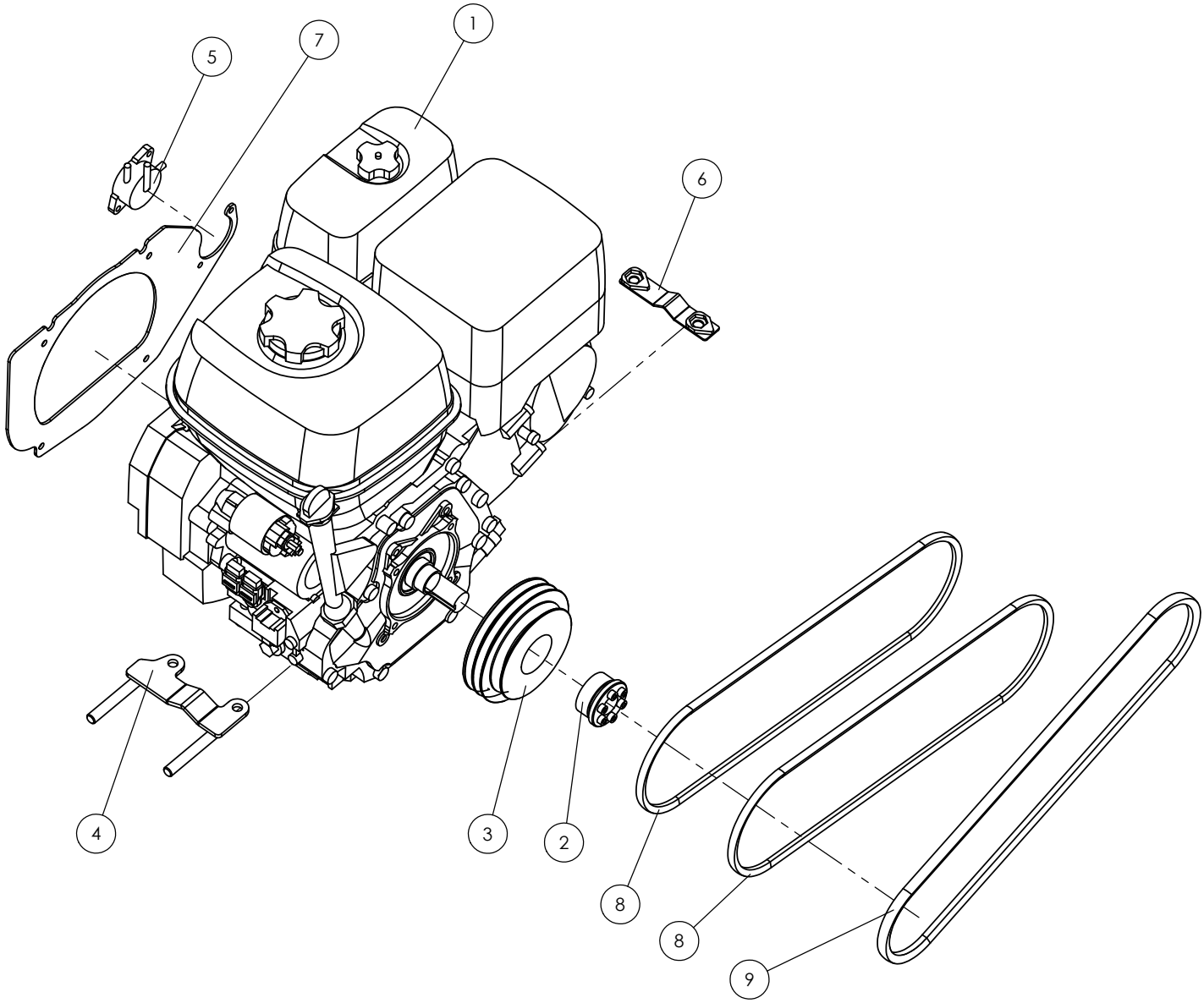

POS. NR.	VARENR.
1	15201000
2	34401001
3	410290
4	410289
5	15901021
6	410607
7	410667
8	52101003
9	52301000

Honda engine Model name GX440IU model type QPAA

FAN COVER	PAGE 13.2
CARBURETOR	PAGE 13.3
AIR CLEANER	PAGE 13.5
MUFFLER	PAGE 13.6
FUEL TANK	PAGE 13.7
FLYWHEEL	PAGE 13.9
CYLINDER HEAD	PAGE 13.10
IGNITION COIL/WIRE HARNESS	PAGE 13.11
ELECTRONIC CONTROL UNIT	PAGE 13.12
STARTER MOTOR	PAGE 13.13
CONTROL PANEL	PAGE 13.14
LABEL	PAGE 13.15
CYLINDER BARREL	PAGE 13.16
OTHER PARTS	PAGE 13.17
CRANKCASE COVER	PAGE 13.18
CRANKSHAFT	PAGE 13.19
PISTON	PAGE 13.20
CAMSHAFT	PAGE 13.21

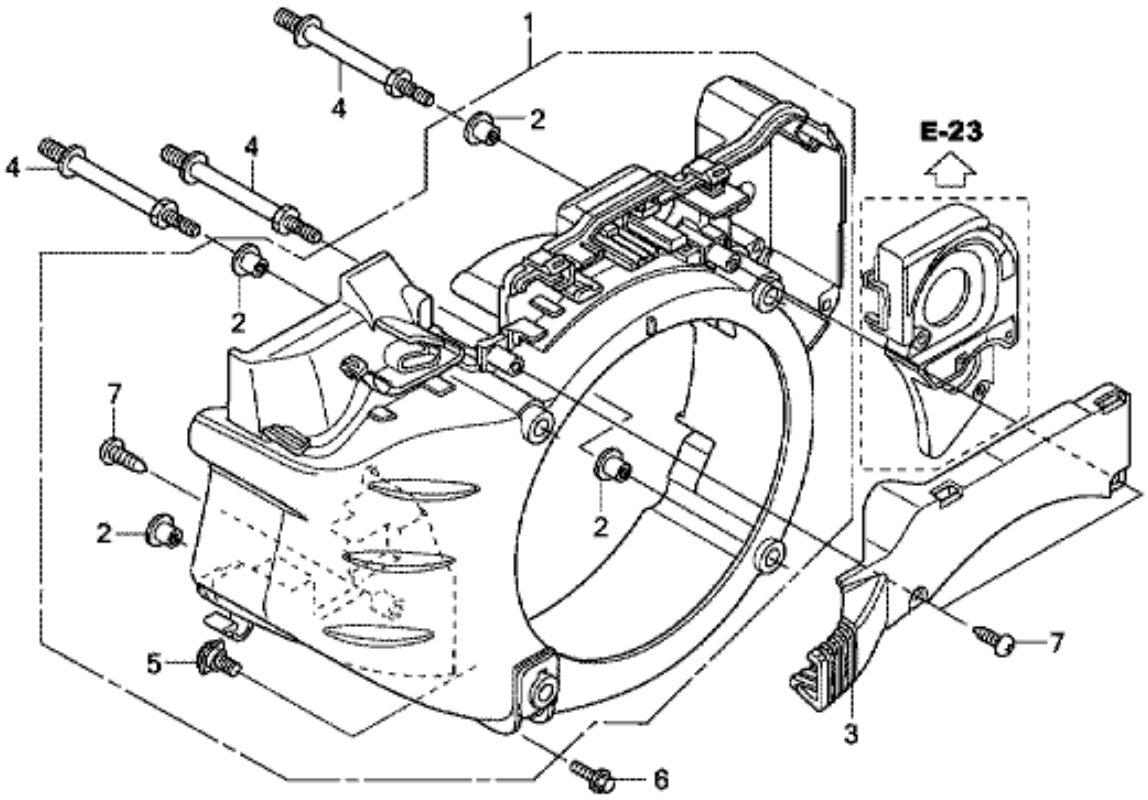

Ref	Partnumber	Description	Qty		Serial Numbers
001	19610-Z2E-010	COVER COMP., FAN	1		1000965-1003014
001	19610-Z2E-010ZB	COVER COMP., FAN * R280*	1		1003015-
002	19619-ZL8-300	COLLAR, FAN COVER	4		-
003	30421-Z2E-000	COVER, ELECTRIC PARTS	1		-
004	90002-Z2E-000	BOLT, STUD	3		-
005	90003-Z2E-000	BOLT, SPECIAL, 6MM	1		-
006	90121-952-000	BOLT, FLANGE, 6X25 (CT200)	1		-
007	93913-25580	SCREW, TAPPING, 5X20	3		-

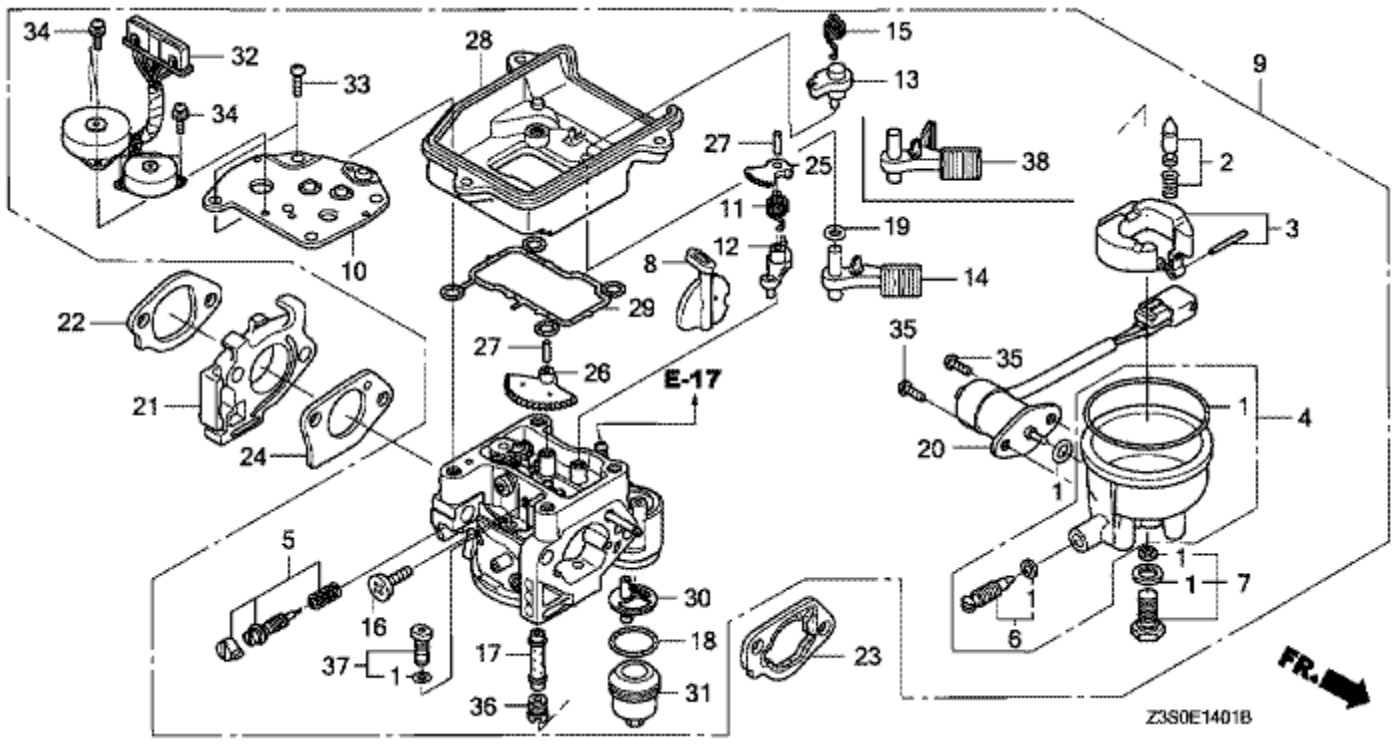

Ref	Partnumber	Description	Qty		Serial Numbers
001	16010-ZF5-L11	GASKET SET	1	☐	-
002	16011-ZA0-931	VALVE SET, FLOAT	1	☐	-
003	TIMAN 15901026	FLOAT SET DOBBELT	1	☐	-
004	16015-Z2E-003	CHAMBER SET, FLOAT	1	☐	-
005	16016-ZH8-W01	SCREW SET	1	☐	-
006	16024-124-760	SCREW SET, DRAIN	1	☐	-
007	16028-ZA0-981	SCREW SET	1	☐	-
008	16044-Z2E-801	CHOKE SET	1	☐	-
009	16100-Z2E-804	CARBURETOR ASSY. (BE87U E/F)	1	☐	1000968-
010	16113-Z2E-003	PLATE, MOTOR	1	☐	-
011	16114-Z2E-802	SPRING, CHOKE RELIEF ARM RETURN	1	☐	-
012	16115-Z2E-G01	ARM COMP., CHOKE RELIEF	1	☐	BE87U E-
013	16116-Z2E-801	ARM, MANUAL START	1	☐	-
015	16118-Z2E-801	SPRING, MANUAL START LEVER RETURN	1	☐	-
016	16124-ZE0-005	SCREW, THROTTLE STOP	1	☐	-
017	16166-Z2E-003	NOZZLE, MAIN	1	☐	-

018	16173-001-004	PACKING, FUEL STRAINER CUP	1	☐	-
019	16178-ZJ0-911	O-RING	1	☐	-
020	16200-Z2E-003	VALVE ASSY., SOLENOID	1	☐	-
021	16211-Z2E-000	INSULATOR, CARBURETOR	1	☐	-
022	16212-Z2E-000	PACKING, INSULATOR	1	☐	-
023	16220-ZA0-702	SPACER COMP., CARBURETOR	1	☐	-
024	16221-ZF6-800	PACKING, CARBURETOR	1	☐	-
025	16608-Z2E-801	GEAR, CHOKE REDUCTION	1	☐	-
026	16614-Z2E-003	GEAR, MIDDLE	1	☐	-
027	16619-Z2E-003	SHAFT, GEAR CENTER	2	☐	-
028	16646-Z2E-003	CASE, MOTOR	1	☐	-
029	16648-Z2E-003	PACKING, MOTOR CASE	1	☐	-
030	16959-Z2E-003	FILTER, CUP	1	☐	-
031	16967-ZE0-811	CUP, FUEL STRAINER	1	☐	-
032	36160-Z2E-801	MOTOR COMP., THROTTLE & CHOKE CONTROL	1	☐	-
033	93500-050200H	SCREW, PAN, 5X20	4	☐	-
034	93892-0300608	SCREW-WASHER, 3X6	4	☐	-
035	93892-0501218	SCREW-WASHER, 5X12	2	☐	-
036	99101-ZH81080	JET, MAIN, #108	(1)	☐	-
036	99101-ZH81100	JET, MAIN, #110	(1)	☐	-
036	99101-ZH81120	JET, MAIN, #112	1	☐	-
037	99204-ZE00450	JET SET, PILOT, #45	1	☐	-
038	16117-Z2E-802	LEVER, MANUAL START	1	☐	BE87U E-

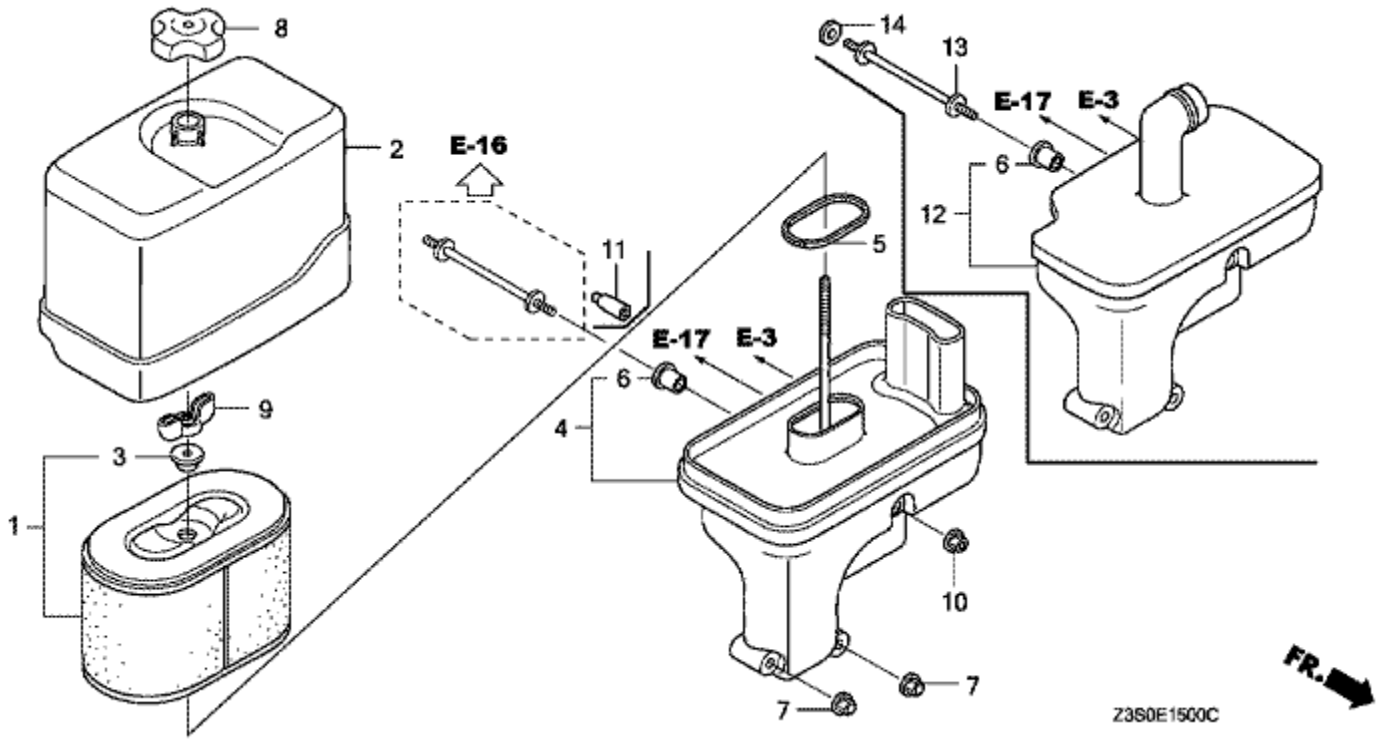

Ref	Partnumber	Description	Qty		Serial Numbers	
001	TIMAN 22601010	ELEMENT COMP., AIR CLEANER	1	☐	-	
002	17231-Z2E-000	COVER, AIR CLEANER	1	☐	-	
003	17232-Z2E-000	GROMMET, AIR CLEANER	1	☐	-	
004	17410-Z2E-000	ELBOW COMP., AIR CLEANER	1	☐	-1002569	
004	17410-Z2E-010	ELBOW COMP., AIR CLEANER	1	☐	1002570-	
005	17417-Z2E-000	PACKING, AIR CLEANER ELBOW	1	☐	-	
006	19619-ZL8-300	COLLAR, FAN COVER	1	☐	-	
007	90201-415-000	NUT, CAP, 6MM	2	☐	-	
008	90202-Z2E-000	NUT, AIR CLEANER COVER	1	☐	-	
009	90325-044-000	NUT, TOOL BOX SETTING	1	☐	-	
010	94050-06000	NUT, FLANGE, 6MM	1	☐	-	

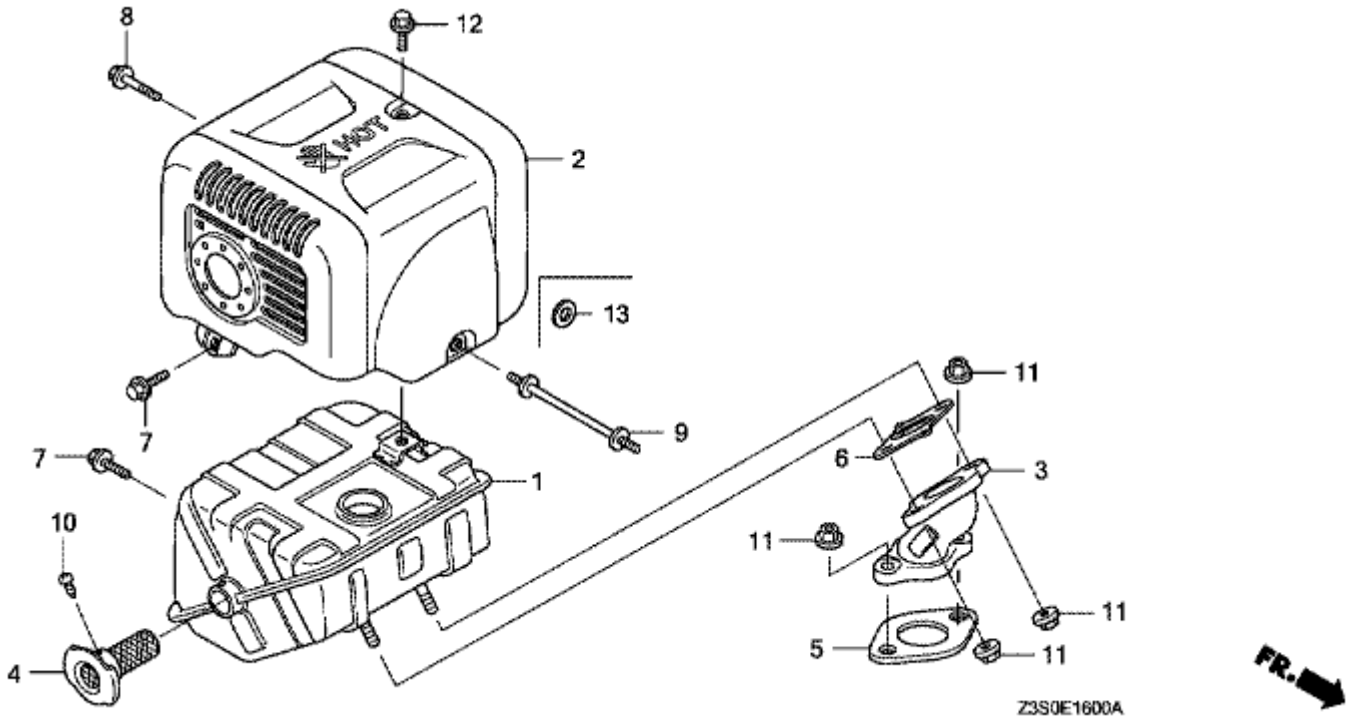

Ref	Partnumber	Description	Qty		Serial Numbers
001	18310-Z2E-000	MUFFLER COMP.	1	☐	-
002	18320-Z2E-000	PROTECTOR COMP., MUFFLER	1	☐	-1005255
002	18320-Z2E-010	PROTECTOR COMP., MUFFLER	1	☐	1005256-
003	18331-Z2E-000	PIPE, EX.	1	☐	-
004	18350-Z2E-800	ARRESTER COMP., SPARK	1	☐	-
005	18381-Z2E-000	GASKET, MUFFLER	1	☐	-
006	18382-Z2E-000	GASKET, MUFFLER (B)	1	☐	-
007	90014-952-000	BOLT, FLANGE, 6X14 (CT200)	2	☐	-
008	90015-883-000	BOLT, FLANGE, 6X28 (CT200)	1	☐	-
009	90041-Z2E-000	BOLT, STUD	1	☐	-
010	90050-ZE1-000	SCREW, TAPPING, 5X8	1	☐	-
011	94050-08000	NUT, FLANGE, 8MM	4	☐	-
012	95701-0600807	BOLT, FLANGE, 6X8	1	☐	-

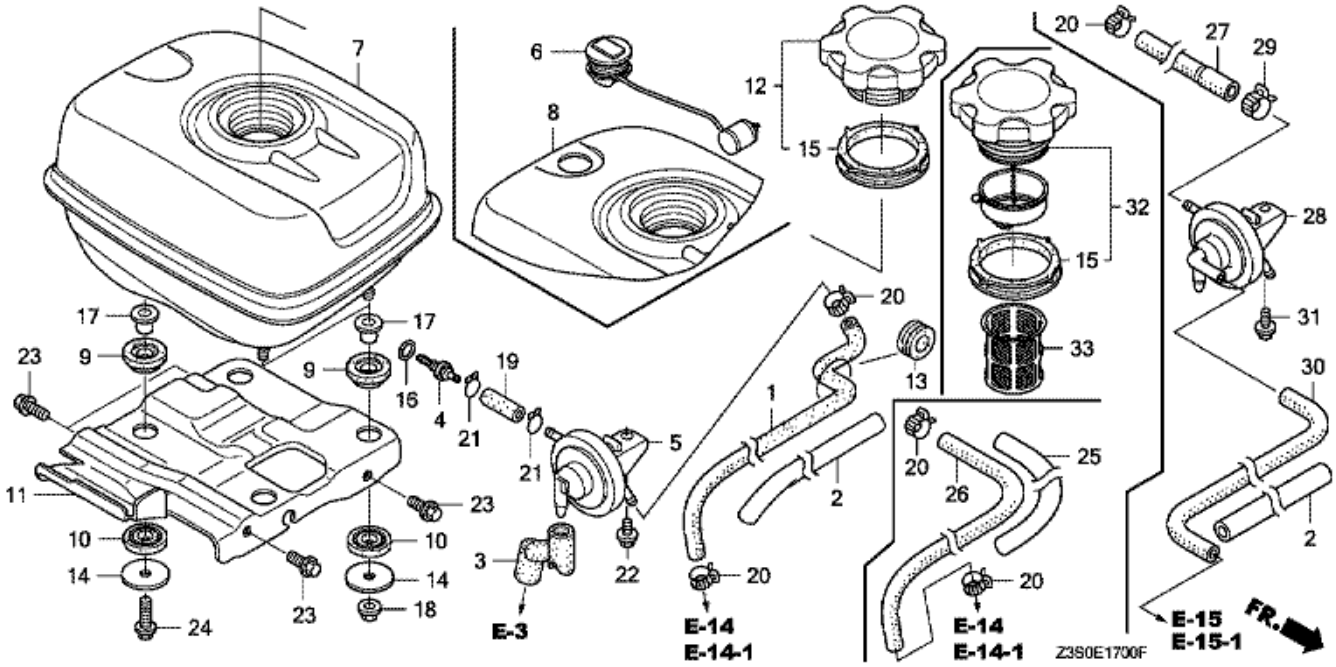

Ref	Partnumber	Description	Qty		Serial Numbers
001	16852-Z2E-811	TUBE, AUTO FUEL COCK (FKM)	1	☐	-1004504
001	16852-Z2E-812	TUBE, AUTO FUEL COCK (FKM)	1	☐	1004505-
002	16854-ZG0-960	RUBBER, SUPPORTER	1	☐	-1002577
002	16854-ZG0-960	RUBBER, SUPPORTER	2	☐	1002578-
003	16882-Z2E-000	TUBE, DIAPHRAGM	1	☐	-1002569
003	16882-Z2E-010	TUBE, DIAPHRAGM	1	☐	1002570-
004	16955-ZE1-000	JOINT, FUEL TANK	1	☐	-
005	See ref. 28	COCK ASSY., FUEL AUTO	1	☐	-1002577
006	17505-Z2E-G02	GAUGE ASSY., FUEL	(1)	☐	1000748-
007	17510-Z2E-010	TANK COMP., FUEL	1	☐	1001344-
008	17510-Z2E-811	TANK COMP., FUEL (GAUGE)	(1)	☐	-
009	17532-Z2E-000	RUBBER, TANK MOUNTING (A)	4	☐	-
010	17533-Z2E-000	RUBBER, TANK MOUNTING (B)	4	☐	-
011	17561-Z2E-000	STAY COMP., TANK	1	☐	-
012	17620-Z2E-000	CAP COMP., FUEL TANK	1	☐	-1003982
013	80101-310-000	RUBBER, RR. FENDER CUSHION	1	☐	-
014	90402-Z2E-000	WASHER, TANK MOUNTING	4	☐	-
015	91301-Z2E-300	PACKING, FUEL CAP	1	☐	-

016	91353-671-004	O-RING, 14MM (NOK)	1	☐	-
017	91504-Z2E-000	COLLAR, TANK MOUNTING	4	☐	-
018	94050-08000	NUT, FLANGE, 8MM	2	☐	-
019	91425-Z2E-801	TUBE, FUEL, 5.3X35 (FKM)	1	☐	-1004456
019	91425-Z2E-802	TUBE, FUEL, 5.3X35 (FKM)	1	☐	1004457-
020	95002-4080008	CLAMP, TUBE (D8)	2	☐	-
021	95002-02100	CLIP, TUBE (B10)	2	☐	-
022	95701-0601208	BOLT, FLANGE, 6X12	1	☐	-1002577
023	95701-0801800	BOLT, FLANGE, 8X18	4	☐	-
024	95701-0802500	BOLT, FLANGE, 8X25	2	☐	-
028	Timan 15901022	COCK ASSY., FUEL AUTO	1	☐	1002578-
030	16853-Z2E-000	TUBE, AUTO FUEL COCK - AIR CLE	1	☐	1002578-
031	95701-0601408	BOLT, FLANGE, 6X14	1	☐	1002578-
032	17620-Z3S-000	CAP COMP., FUEL TANK	1	☐	1003983-
033	17670-Z3S-000	FILTER COMP., FUEL TANK	1	☐	1003983-

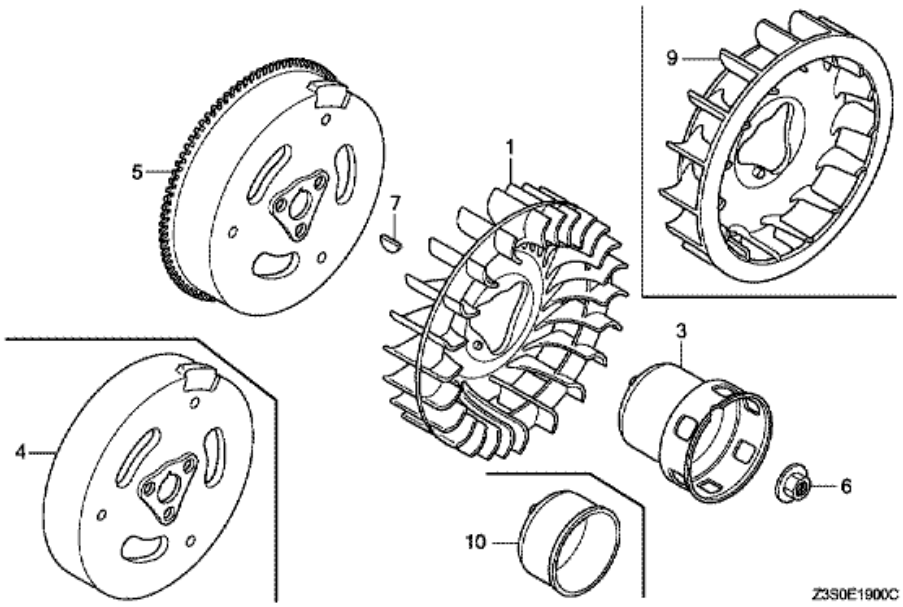

Ref	Partnumber	Description	Qty		Serial Numbers
001	19511-Z2E-000	FAN, COOLING	1	☐	-
005	31110-Z2E-801	FLYWHEEL COMP.	1	☐	-
006	90201-Z2E-000	NUT, SPECIAL, 16MM	1	☐	-
007	90741-ZE2-000	KEY, SPECIAL WOODRUFF, 25X18	1	☐	-

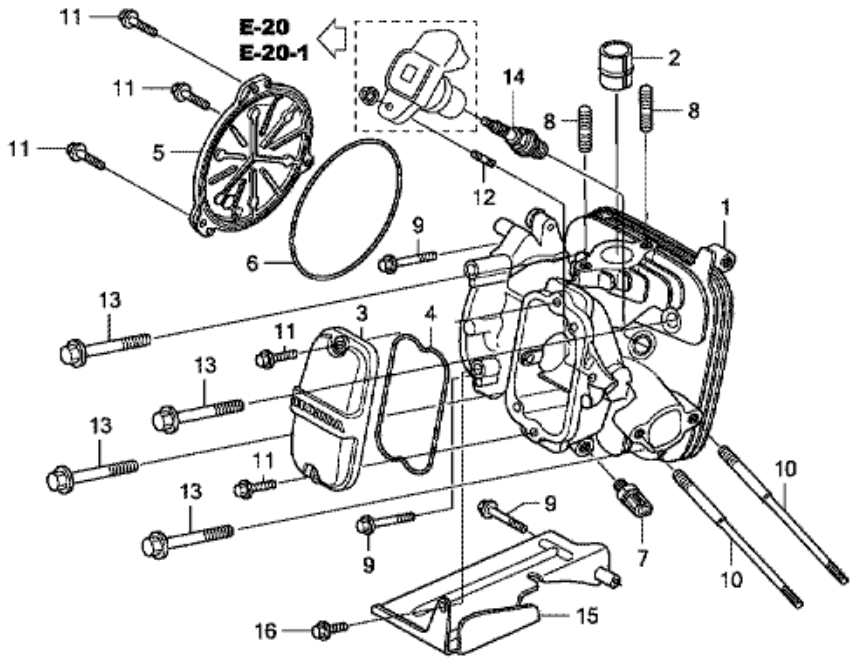

Ref	Partnumber	Description	Qty		Serial Numbers
001	12210-Z2E-415	HEAD COMP., CYLINDER	1	☐	1000747-1002537
001	12210-Z2E-425	HEAD COMP., CYLINDER	1	☐	1002538-
002	12213-Z2E-000	LINER, PORT	1	☐	-
003	12311-Z2E-000	COVER, CYLINDER HEAD	1	☐	-1002577
003	12311-Z2E-010	COVER, CYLINDER HEAD	1	☐	1002578-
004	12312-Z2E-000	PACKING, HEAD COVER	1	☐	-
005	12331-Z2E-000	COVER, CYLINDER HEAD SIDE	1	☐	-1002577
005	12331-Z2E-010	COVER, CYLINDER HEAD SIDE	1	☐	1002578-
006	12332-Z2E-000	PACKING, SIDE COVER	1	☐	-
007	35673-Z2E-013	SENSOR ASSY., TEMPERATURE	1	☐	1001344-
008	90012-KM9-000	BOLT, STUD, 8X34	2	☐	-
009	90031-ZE1-000	BOLT, FLANGE, 6X32 (CT200)	2	☐	-
010	90042-Z2E-000	BOLT, STUD, 8X136	2	☐	-
011	90121-952-000	BOLT, FLANGE, 6X25 (CT200)	5	☐	-
012	92900-060200B	BOLT, STUD, 6X20	1	☐	-
013	95701-1007000	BOLT, FLANGE, 10X70	4	☐	-
014	TIMAN 15901023	PLUG, SPARK (K16PR-UR)	(1)	☐	-

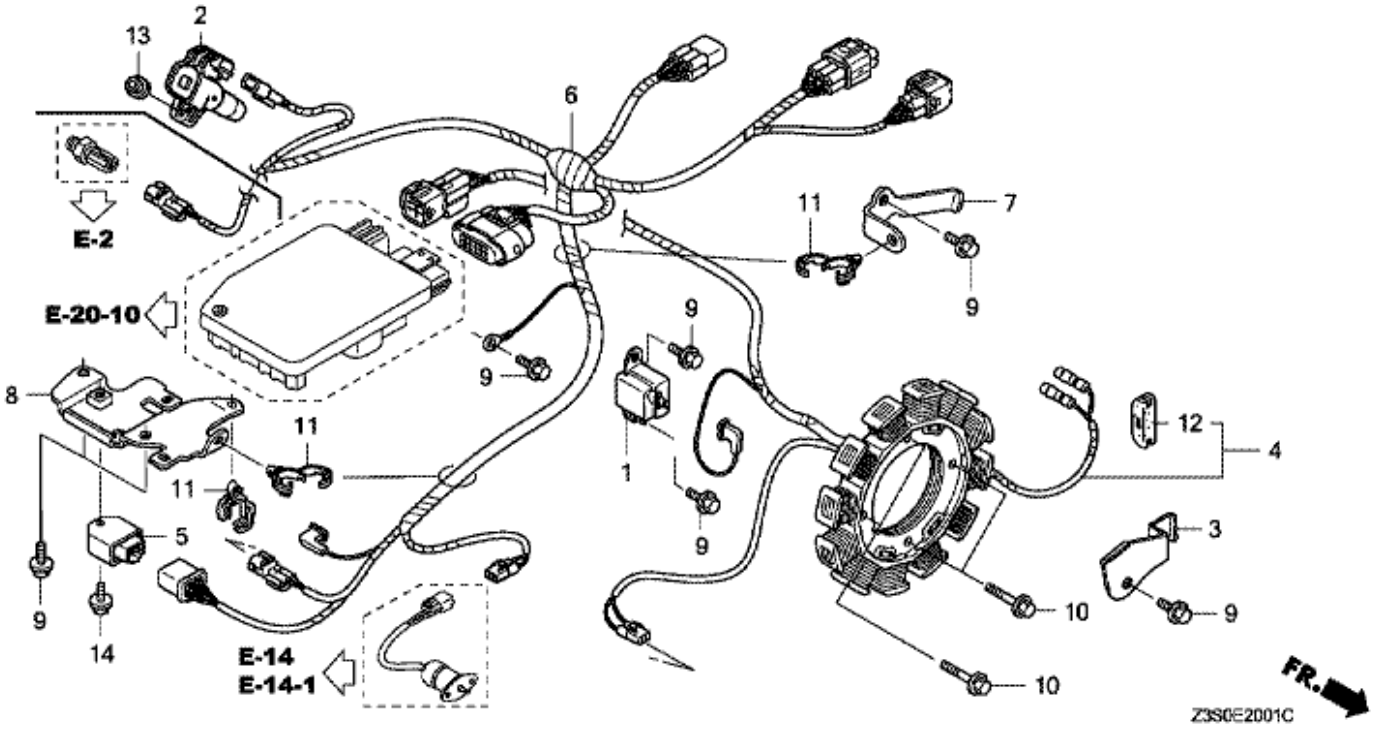

Ref	Partnumber	Description	Qty		Serial Numbers
001	30310-Z2E-003	COIL ASSY., PULSER	1	☐	-
002	TIMAN 15901025	COIL COMP., IGNITION	1	☐	1001521-
003	31511-Z2E-800	CLAMPER, CORD	1	☐	-
004	31630-Z2E-003	COIL ASSY., CHARGE (20A)	1	☐	-
005	31710-ZS9-A02	RECTIFIER ASSY.	1	☐	1001076-
006	32110-Z2E-800	HARNESS ASSY., ENGINE WIRE	1	☐	-
007	32111-Z2E-000	BRACKET, HARNESS CLIP (A)	1	☐	-
008	32116-Z2E-800	BRACKET, HARNESS (C)	1	☐	-
009	90014-952-000	BOLT, FLANGE, 6X14 (CT200)	7	☐	-
010	90031-ZE1-000	BOLT, FLANGE, 6X32 (CT200)	4	☐	-
011	90691-ZB7-003	CLIP, HARNESS	3	☐	-
012	91601-Z2E-000	GROMMET, CORD	1	☐	-
013	94050-06000	NUT, FLANGE, 6MM	1	☐	-
014	95701-0601208	BOLT, FLANGE, 6X12	1	☐	-

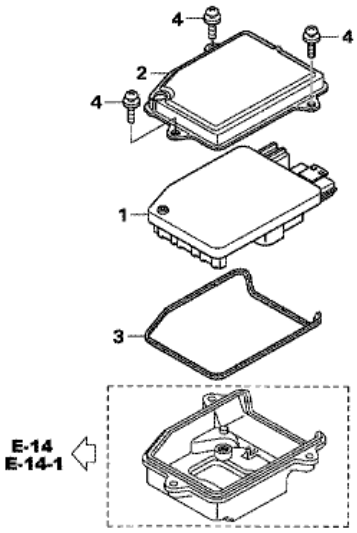

Ref	Partnumber	Description	Qty		Serial Numbers
001	TIMAN 15901029	CONTROL UNIT, ELECTRONIC	1	☐	1001889-
002	34754-Z2E-000	COVER, ELECTRONIC CONTROL UNIT	1	☐	-
003	34755-Z2E-000	GROMMET, ELECTRONIC CONTROL UNIT COVER	1	☐	-
004	93891-0401000	SCREW-WASHER, 4X10	3	☐	-

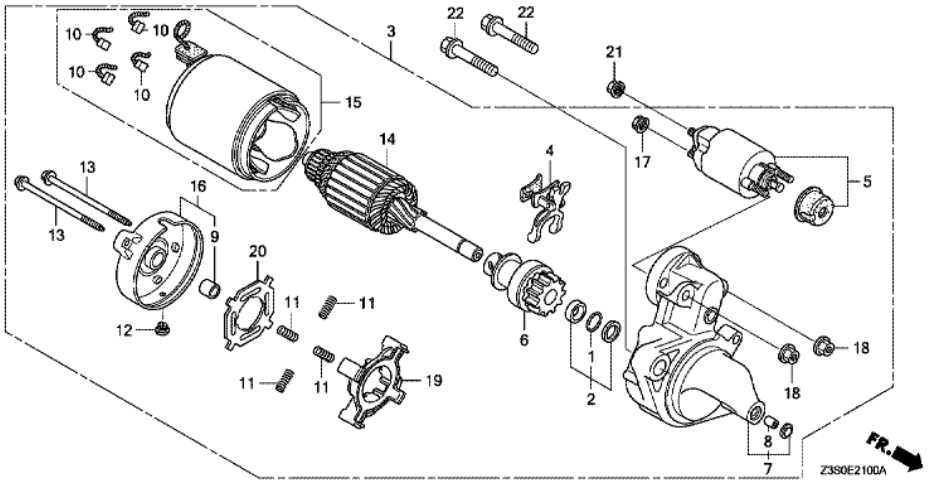

Ref	Partnumber	Description	Qty		Serial Numbers
001	30201-PH9-004	RING, SNAP (DENSO)	1	☐	-
002	30202-PZ1-003	COLLAR SET, CLUTCH STOP	1	☐	-
003	31200-Z2E-013	MOTOR ASSY., STARTER	1	☐	1002361-
004	31203-PH9-004	LEVER, PINION DRIVE	1	☐	-
005	31204-Z2E-003	SWITCH ASSY., MAGNET	1	☐	1002361-
006	31207-ZE9-H01	CLUTCH COMP., OVERRUNNING	1	☐	-
007	31208-Z2E-003	HOUSING COMP., DRIVE SIDE	1	☐	-
008	31209-PH9-004	BEARING A	1	☐	-
009	31210-PH9-004	BEARING B	1	☐	-
010	31211-PH9-004	BRUSH	4	☐	-
011	31212-PH9-004	SPRING, BRUSH	4	☐	-
012	31213-P64-N01	COVER	1	☐	-
013	31214-PH9-004	BOLT, THROUGH	2	☐	-
014	31217-Z0A-003	ARMATURE COMP.	1	☐	-
015	31218-PH9-004	YOKE COMP.	1	☐	-
016	31219-Z2E-003	FRAME COMP., COMMUTATOR END	1	☐	-
017	31220-PH9-004	NUT, HEX., 8MM	1	☐	-
018	31223-PA0-006	NUT, HEX.	2	☐	-
019	31231-PH9-004	HOLDER, BRUSH	1	☐	-
020	31233-PH9-004	INSULATOR, BRUSH HOLDER	1	☐	-
021	94070-08080	NUT-WASHER, 8MM	1	☐	-
022	95701-1004000	BOLT, FLANGE, 10X40	2	☐	-

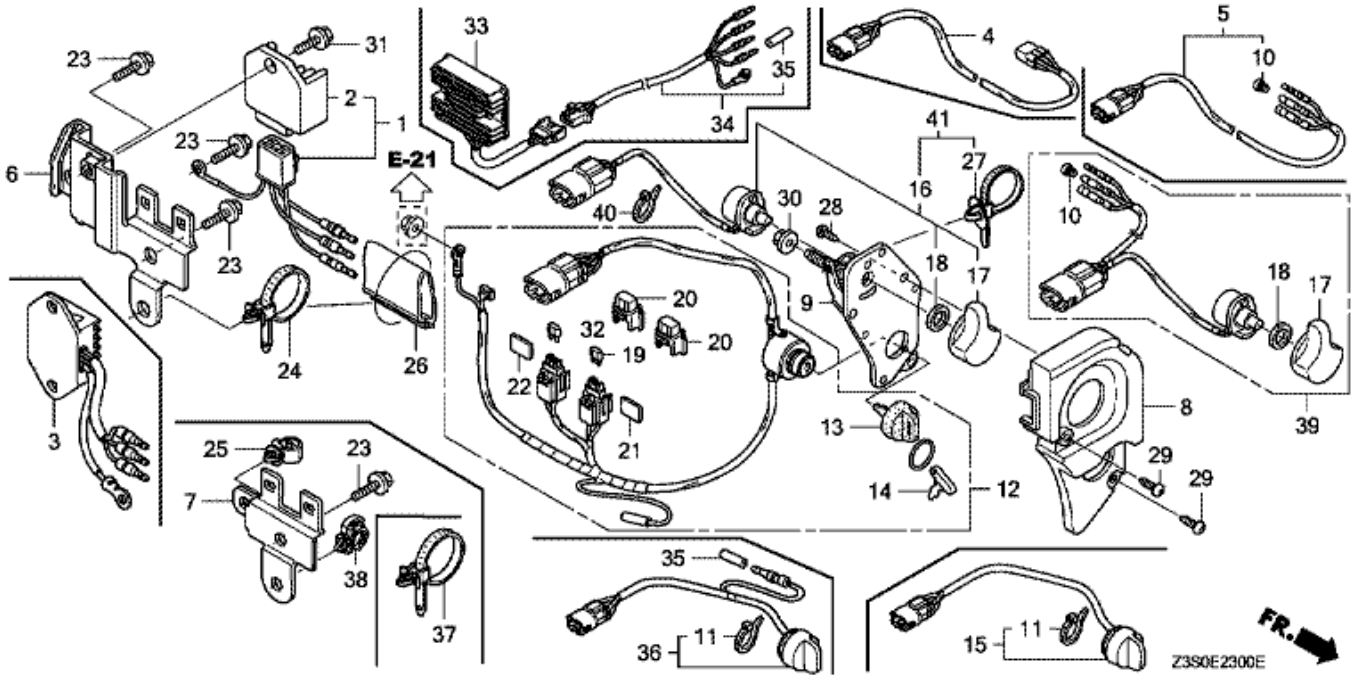

Ref	Partnumber	Description	Qty		Serial Numbers
004	32105-Z2E-000	HARNESS ASSY., SUB WIRE (ENGINE SWITCH)	1	☐	-
004	32105-Z2E-810	HARNESS ASSY., SUB WIRE (SPEED VOLUME)	1	☐	-
007	32114-Z2E-800	BRACKET, HARNESS (B)	1	☐	-
008	32346-Z2E-800	PANEL, CONTROL	1	☐	-
009	32347-Z2E-800	BRACKET, CONTROL BOX	1	☐	-
013	35110-736-612	KEY ASSY., COMBINATION SWITCH (BLACK)	1	☐	-
014	35111-880-013	KEY COMP.	1	☐	-
020	38216-Z2E-003	COVER ASSY., FUSE	2	☐	-
022	87117-Z2E-800	LABEL, FUSE (30A)	1	☐	-
023	90014-952-000	BOLT, FLANGE, 6X14 (CT200)	1	☐	-
025	90691-ZB7-003	CLIP, HARNESS	1	☐	-
027	91567-SE0-003	BAND, WIRE HARNESS (WHITE) (93.5MM)	1	☐	-
028	93913-25380	SCREW, TAPPING, 5X14 (PO)	1	☐	-
029	93913-25580	SCREW, TAPPING, 5X20	2	☐	-
030	94050-06000	NUT, FLANGE, 6MM	1	☐	-
032	98200-43000	FUSE, MINI (30A)	1	☐	-
037	90672-SB2-003	STRAP, CABLE, 105MM (BLACK)	1	☐	1002823-
038	90691-ZB7-003	CLIP, HARNESS	1	☐	-1002822

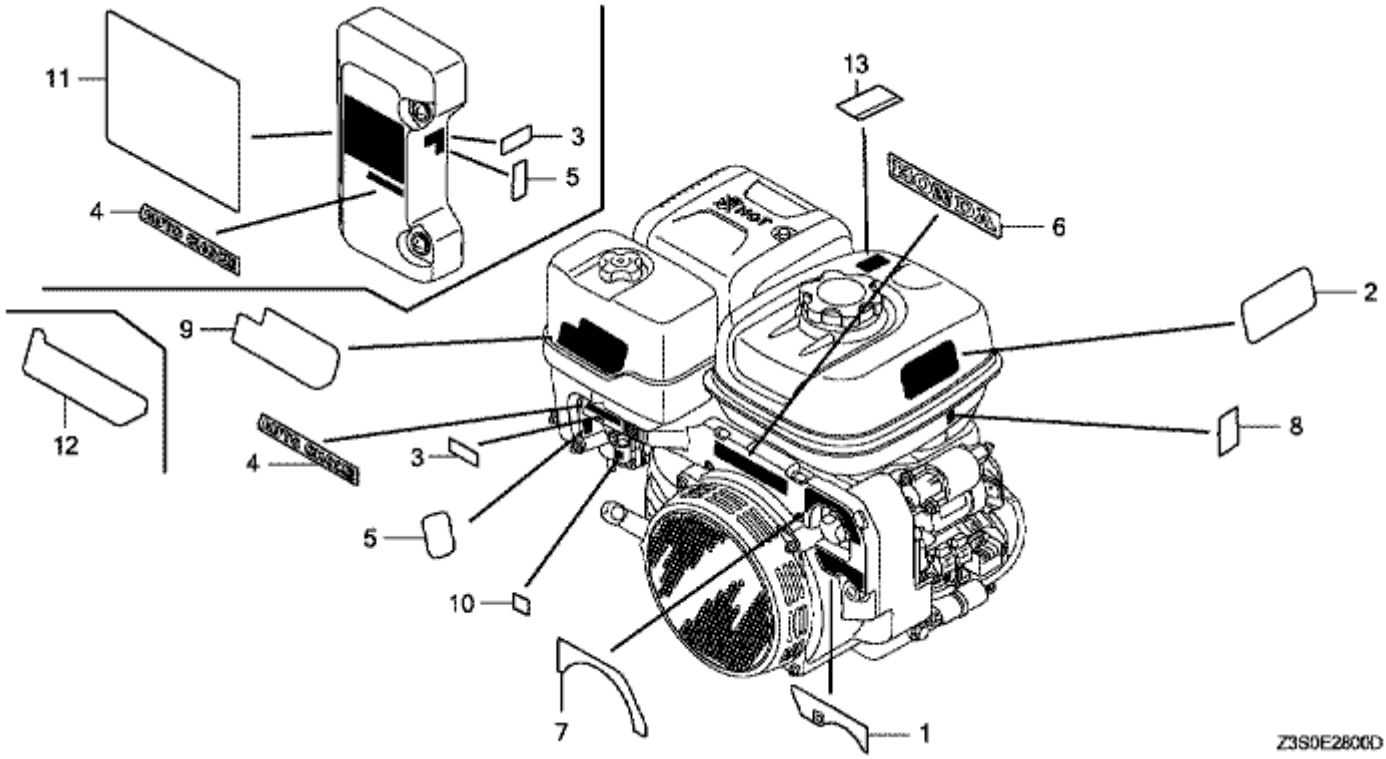

Ref	Partnumber	Description	Qty		Serial Numbers
001	87501-Z2E-800	MARK, ENGINE SWITCH	1		-
002	87516-ZH7-000	MARK, OPERATOR CAUTION (ENGLISH) (MADE I	1		-1005255
002	87516-ZH7-010	MARK, OPERATOR CAUTION (ENGLISH) (MADE I	1		1005256-
002	87516-ZH7-810	MARK, OPERATOR CAUTION (PICTOGRAPH) (MAD	(1)		-1005255
002	87519-ZH7-000	MARK, OPERATOR CAUTION (PICTOGRAPH)	1		1005256-
004	87528-Z2E-800	MARK, CHOKE	1		-
005	87529-Z2E-000	MARK, CHOKE (CAUTION)	1		-
006	87531-Z2E-000	MARK, HONDA	1		-1004855
006	87531-Z2E-010	MARK, HONDA	1		1004856-
008	87594-Z2E-000	MARK, OIL CAUTION	1		-
012	87602-Z2E-010	MARK, SALES POINT	1		1001098-1001792
012	87602-Z2E-020	MARK, SALES POINT	1		1001793-1004831
012	87602-Z2E-030	MARK, SALES POINT	1		1004832-

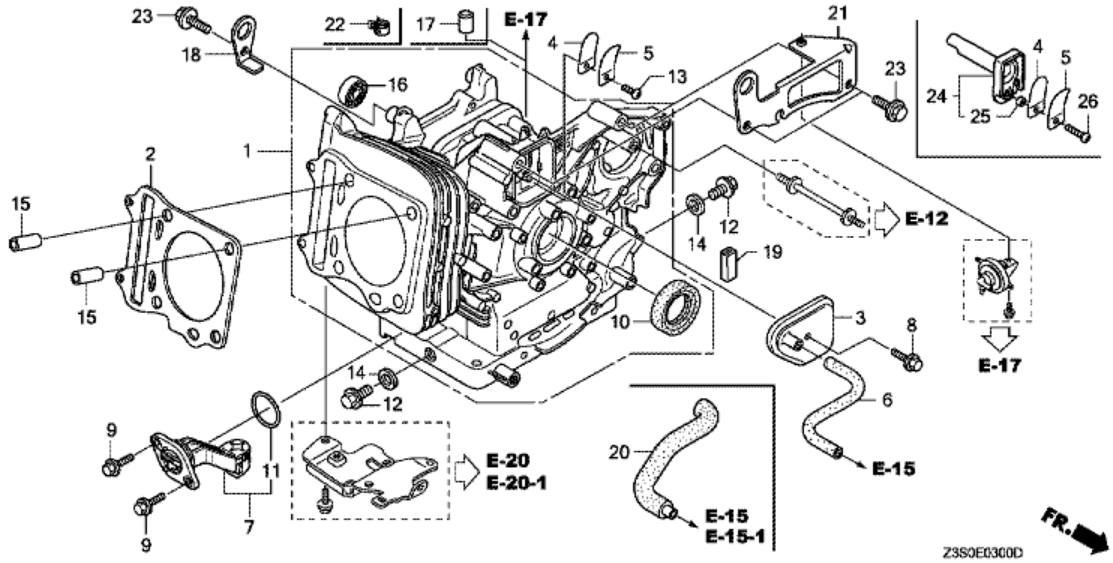

Ref	Partnumber	Description	Qty		Serial Numbers
001	12000-Z2E-416	BARREL ASSY., CYLINDER	1	☐	1002570-
002	12251-Z2E-003	GASKET, CYLINDER HEAD	1	☐	-
003	12356-Z2E-000	COVER, BREATHER	1	☐	-
004	12372-ZA0-701	PLATE, VALVE	1	☐	-
005	12374-Z0A-000	STOPPER, VALVE	1	☐	-
006	15721-Z2E-000	TUBE, BREATHER	1	☐	-1002577
007	35480-Z2E-003	SWITCH ASSY., OIL LEVEL	1	☐	-
008	90014-952-000	BOLT, FLANGE, 6X14 (CT200)	1	☐	-
009	90017-ZN2-U00	BOLT, FLANGE, 6X18 (CT200)	2	☐	-
010	91201-ZE3-004	OIL SEAL, 35X52X8	1	☐	-
011	91305-Z2E-000	O-RING, 31.8X2.4	1	☐	-
012	92800-20000	BOLT, DRAIN PLUG, 20MM	2	☐	-
013	93500-050080A	SCREW, PAN, 5X8	1	☐	-1002577
014	94109-20000	WASHER, DRAIN PLUG, 20MM	2	☐	-
015	94301-12200	DOWEL PIN, 12X20	2	☐	-
016	96100-6203000	BEARING, RADIAL BALL, 6203	1	☐	-
020	15721-Z2E-010	TUBE, BREATHER	1	☐	1002578-
024	12316-Z2E-G01	INSULATOR, BREATHER VALVE	1	☐	1002578-
025	91503-ZM7-000	COLLAR, AIR CLEANER	1	☐	1002578-
026	93500-050140A	SCREW, PAN, 5X14	1	☐	1002578-

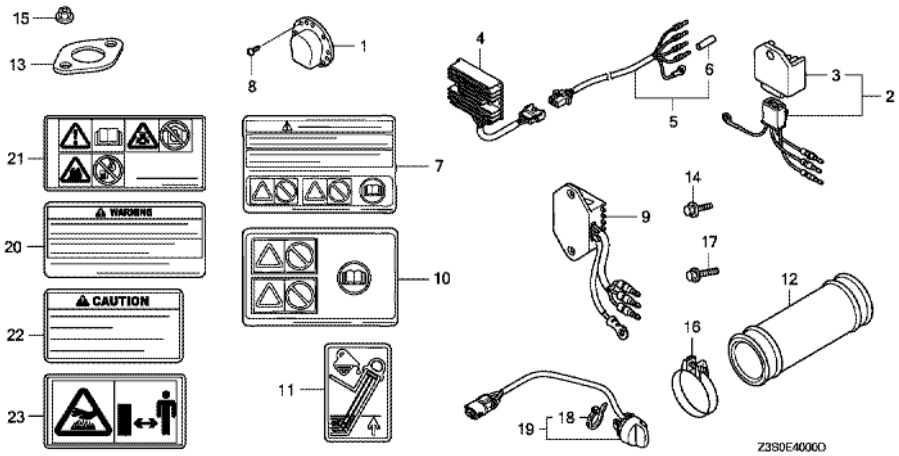

Ref	Partnumber	Description	Qty		Serial Numbers
001	18331-ZE3-811	CAP, MUFFLER	1	☐	1000193-
004	TIMAN 15901028	RECTIFIER ASSY., REGULATOR (20A)	1	☐	-
005	32105-ZJ1-800	HARNESS ASSY., SUB WIRE	1	☐	-
006	32824-ZV5-003	PLUG, OUTER CONNECTOR	1	☐	-
007	87516-ZH7-800	MARK, OPERATOR CAUTION (FRENCH) (MADE IN	1	☐	-1005255
008	90055-ZE1-000	SCREW, TAPPING, 4X6	3	☐	-
020	87516-ZH7-801	MARK, OPERATOR CAUTION (FRENCH) (MADE IN	1	☐	1005256-
022	87539-Z0J-000	MARK, EX. CAUTION (ENGLISH)	1	☐	1005256-
022	87539-Z0J-810	MARK, EX. CAUTION (FRENCH)	1	☐	1005256-

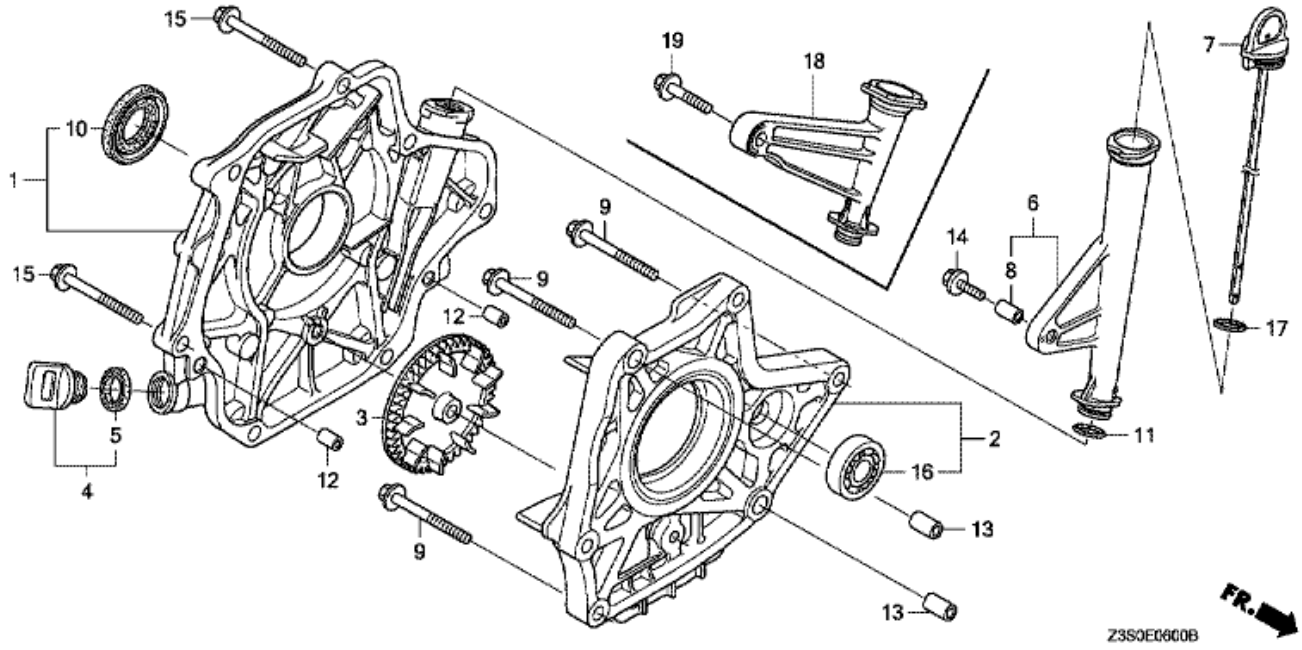

Ref	Partnumber	Description	Qty		Serial Numbers
001	11300-Z2E-600	COVER ASSY., CRANKCASE	1		-
002	12115-Z2E-000	HOLDER COMP., BEARING	1		-
003	15363-Z2E-000	GEAR, SLINGER	1		-
004	15600-ZG4-003	CAP ASSY., OIL FILLER	1		-
005	15625-ZE1-003	PACKING, OIL FILLER CAP	1		-
006	15631-Z2E-800	EXTENSION, OIL FILLER	1		-
007	15655-Z2E-801	GAUGE COMP., OIL LEVEL (328MM)	1		1000748-
008	77301-124-000	COLLAR, SEAT MOUNTING	1		-
009	90007-Z2E-000	BOLT, FLANGE, 8X45	6		-
010	91201-ZE3-004	OIL SEAL, 35X52X8	1		-
011	91306-Z2E-000	O-RING, 20.8X2.4	1		-
012	94301-08140	DOWEL PIN, 8X14	2		-
013	94301-10160	DOWEL PIN, 10X16	2		-
014	95701-0602008	BOLT, FLANGE, 6X20	1		-
015	95701-0803500	BOLT, FLANGE, 8X35	7		-
016	96100-6202000	BEARING, RADIAL BALL, 6202	1		-
017	91302-MAL-601	O-RING, 18.1X3.6	1		1000748-

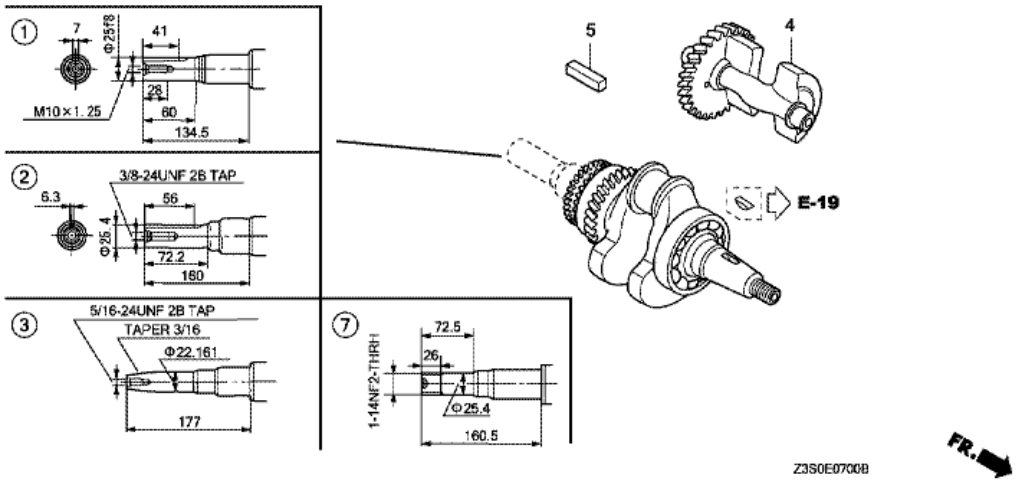

Ref	Partnumber	Description	Qty		Serial Numbers
002	TIMAN 15901030	CRANKSHAFT COMP SPECIAL	1	☐	-
004	TIMAN 15901031	WEIGHT, BALANCER SPECIAL	1	☐	-
005	90745-ZE2-600	KEY, 6.3X6.3X43	1	☐	-

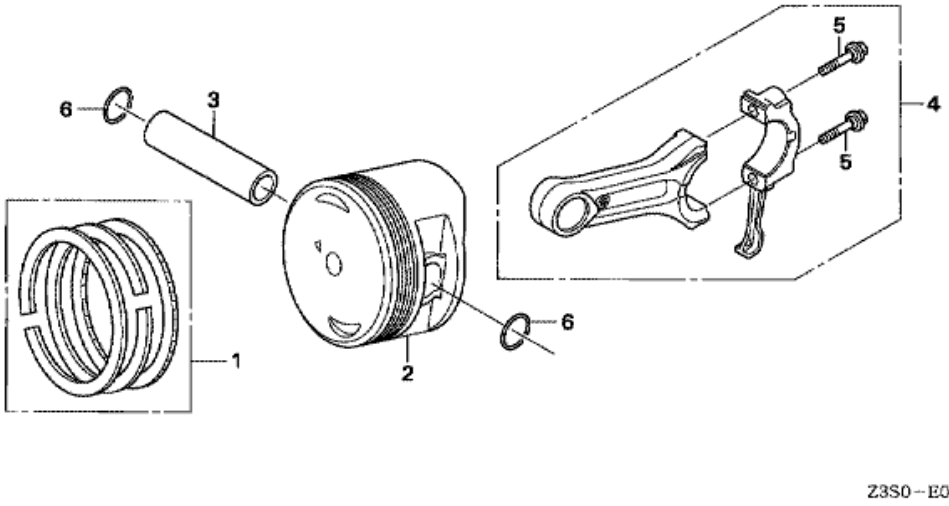

Ref	Partnumber	Description	Qty		Serial Numbers	
001	13010-Z2E-003	RING SET, PISTON	1		-	
002	13101-Z2E-000	PISTON	1		-	
003	13111-Z2E-000	PIN, PISTON	1		-	
004	13200-Z2E-000	ROD ASSY., CONNECTING	1		-	
005	90001-ZE8-000	BOLT, CONNECTING ROD	2		-	
006	94601-21000	CLIP, PISTON PIN, 21MM	2		-	

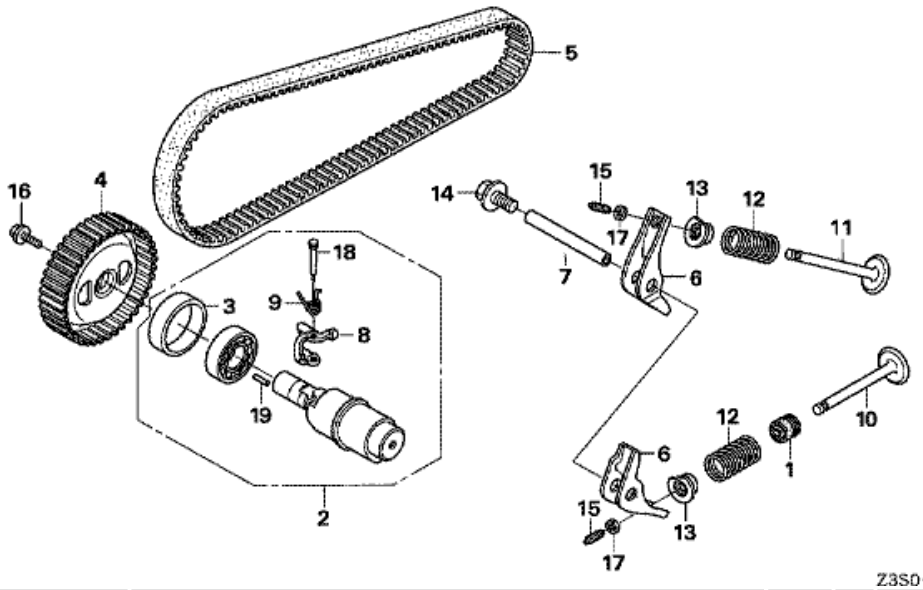

Z3S0-E0900

Ref	Partnumber	Description	Qty		Serial Numbers
001	12208-413-003	SEAL, VALVE STEM (ARAI)	1	☐	-
002	14100-Z2E-000	CAMSHAFT ASSY.	1	☐	-
003	14191-Z2E-300	BUSH, CAMSHAFT BEARING	1	☐	-
004	14321-Z2E-000	PULLEY, CAMSHAFT	1	☐	-
005	14400-Z2E-003	BELT, TIMING	1	☐	-
006	14431-Z2E-000	ARM, VALVE ROCKER	2	☐	-
007	14461-Z2E-000	SHAFT, ROCKER ARM	1	☐	-
008	14561-Z2E-300	WEIGHT, DECOMPER	1	☐	-
009	14568-Z2E-300	SPRING, WEIGHT RETURN	1	☐	-
010	14711-Z2E-000	VALVE, IN.	1	☐	-
011	14721-Z2E-000	VALVE, EX.	1	☐	-
012	14751-Z2E-000	SPRING, VALVE	2	☐	-
013	14771-ZE1-000	RETAINER, IN. VALVE SPRING	2	☐	-
014	90005-Z2E-000	BOLT, FLANGE, 12X18	1	☐	-
015	90012-Z2E-000	SCREW, TAPPET ADJUSTING	2	☐	-
016	90071-MG8-000	BOLT, FLANGE SOCKET, 6X16	1	☐	-
017	90206-001-000	NUT, TAPPET ADJUSTING	2	☐	-
018	90701-Z2E-300	PIN, WEIGHT CENTER	1	☐	-
019	96220-20138	ROLLER, 2X13.8	1	☐	-